SECTION PG

POWER SUPPLY, GROUND & CIRCUIT ELEMENTS

CONTENTS

PRECAUTIONS

PFP:00001

Precautions for Battery Service

AKS00AV9

Before disconnecting the battery, lower both the driver and passenger windows. This will prevent any interference between the window edge and the vehicle when the door is opened/closed. During normal operation, the window slightly raises and lowers automatically to prevent any window to vehicle interference. The automatic window function will not work with the battery disconnected.

POWER SUPPLY ROUTING CIRCUIT

PFP:24110

Schematic

AKS0012B

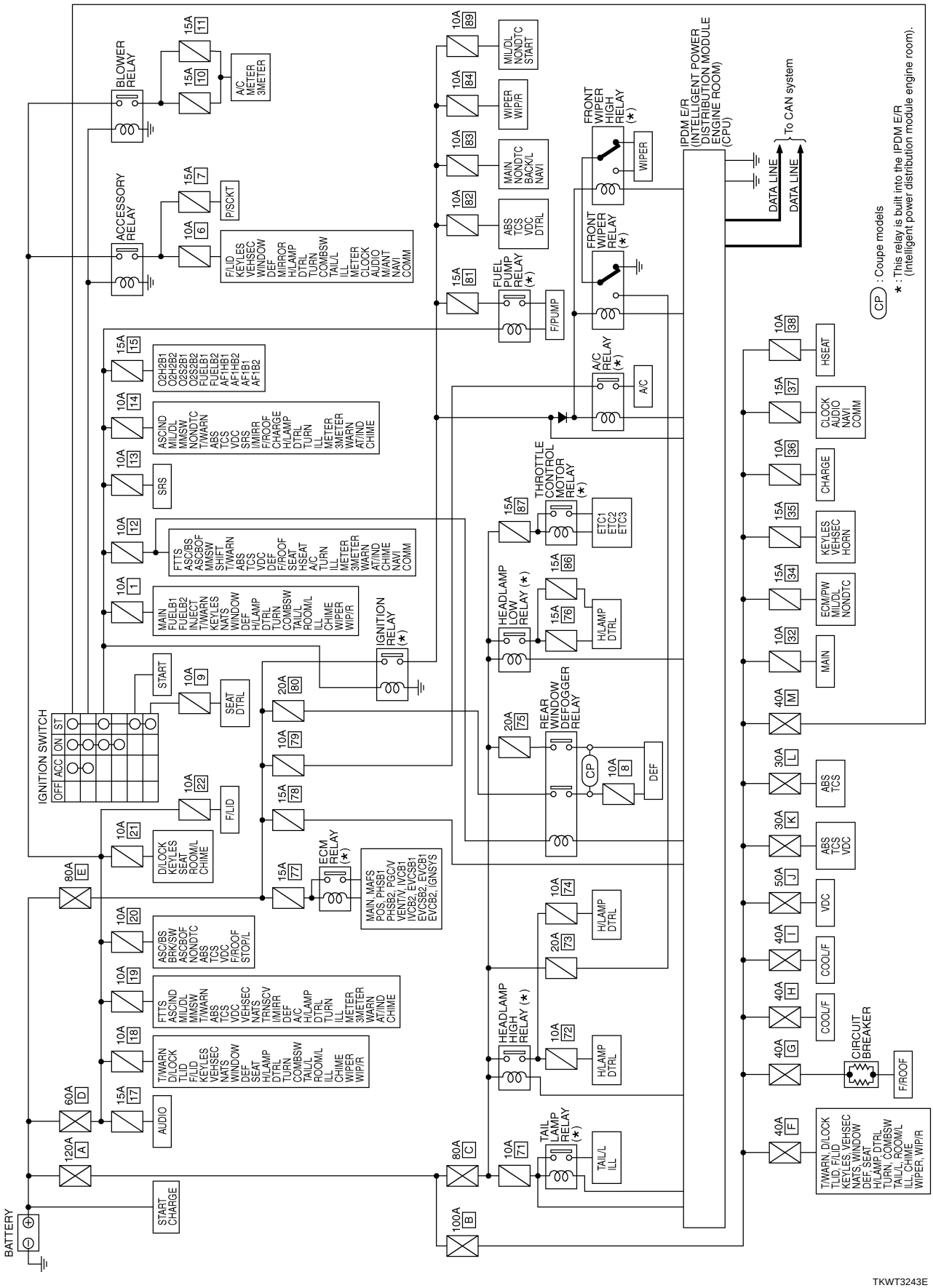

TKWT3243E

Wiring Diagram — POWER —

AKS0012C

BATTERY POWER SUPPLY — IGNITION SW. IN ANY POSITION

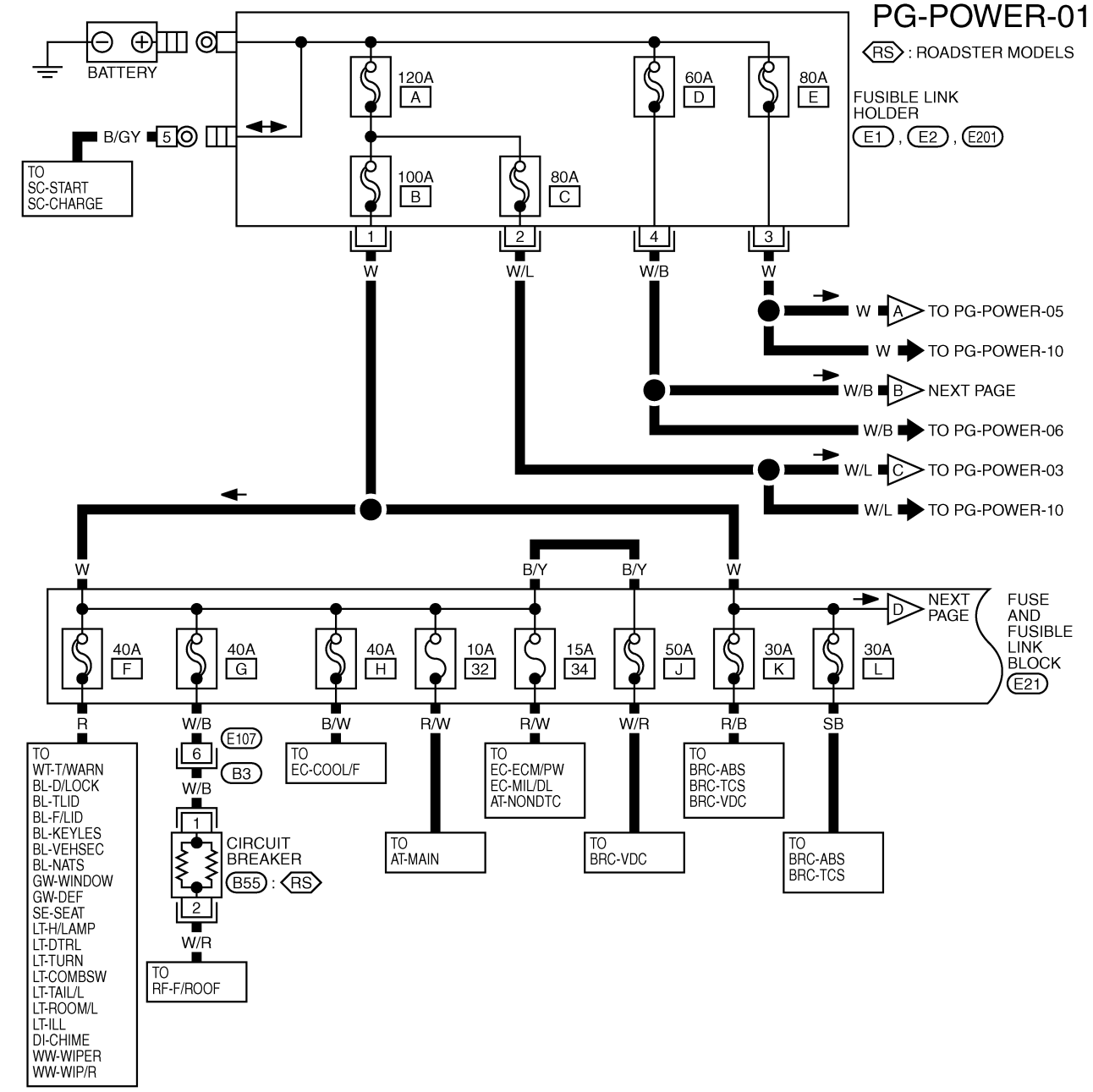

TKWT2521E

PG-POWER-02

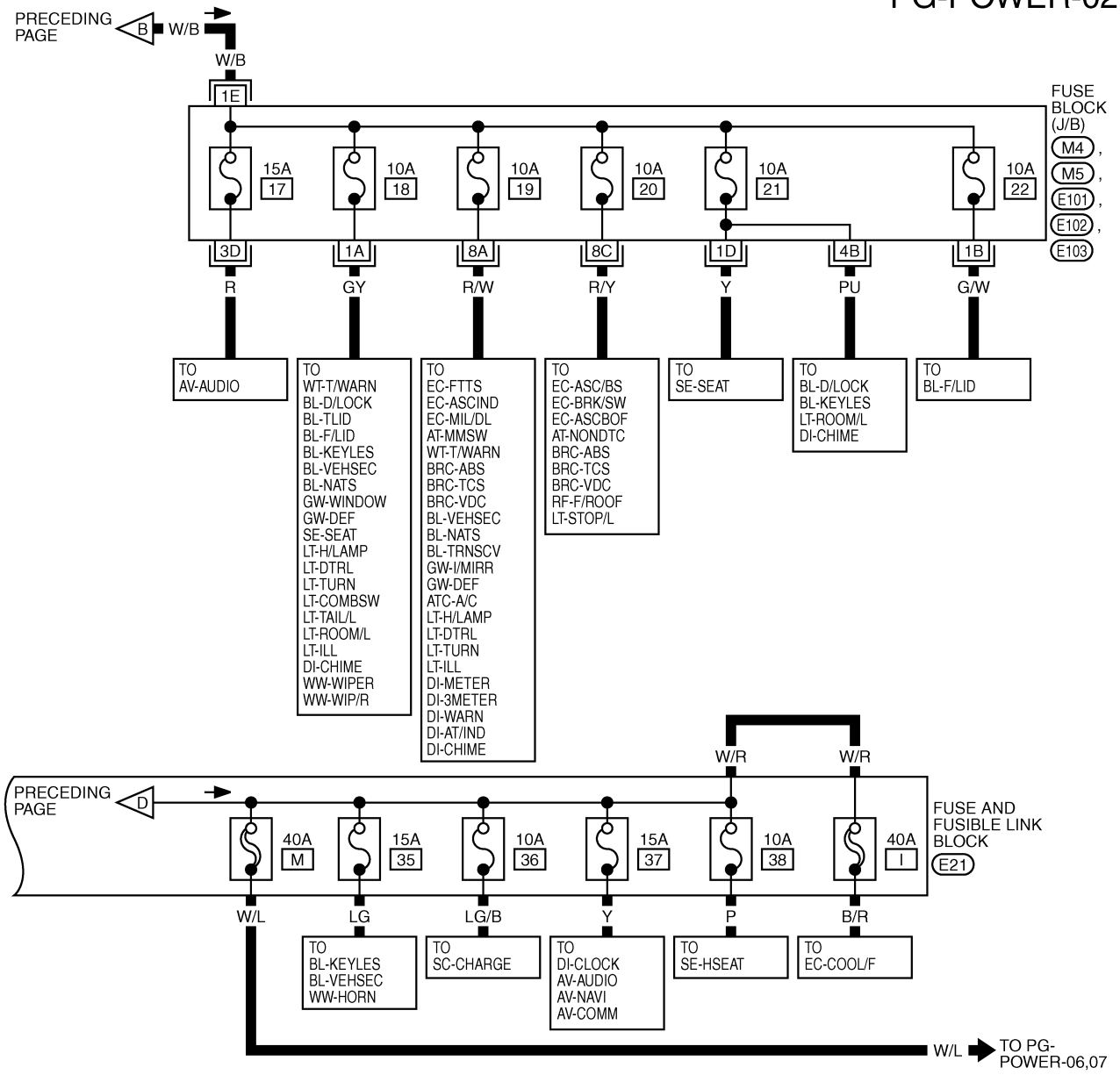

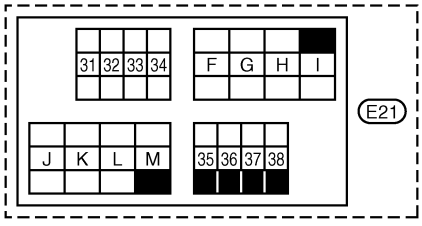

REFER TO THE FOLLOWING.

M4, M5, E101, E102, E103 -FUSE BLOCK-JUNCTION BOX (J/B)

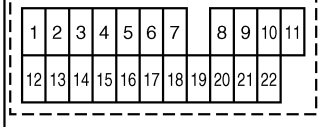

TKWT2348E

PG-POWER-03

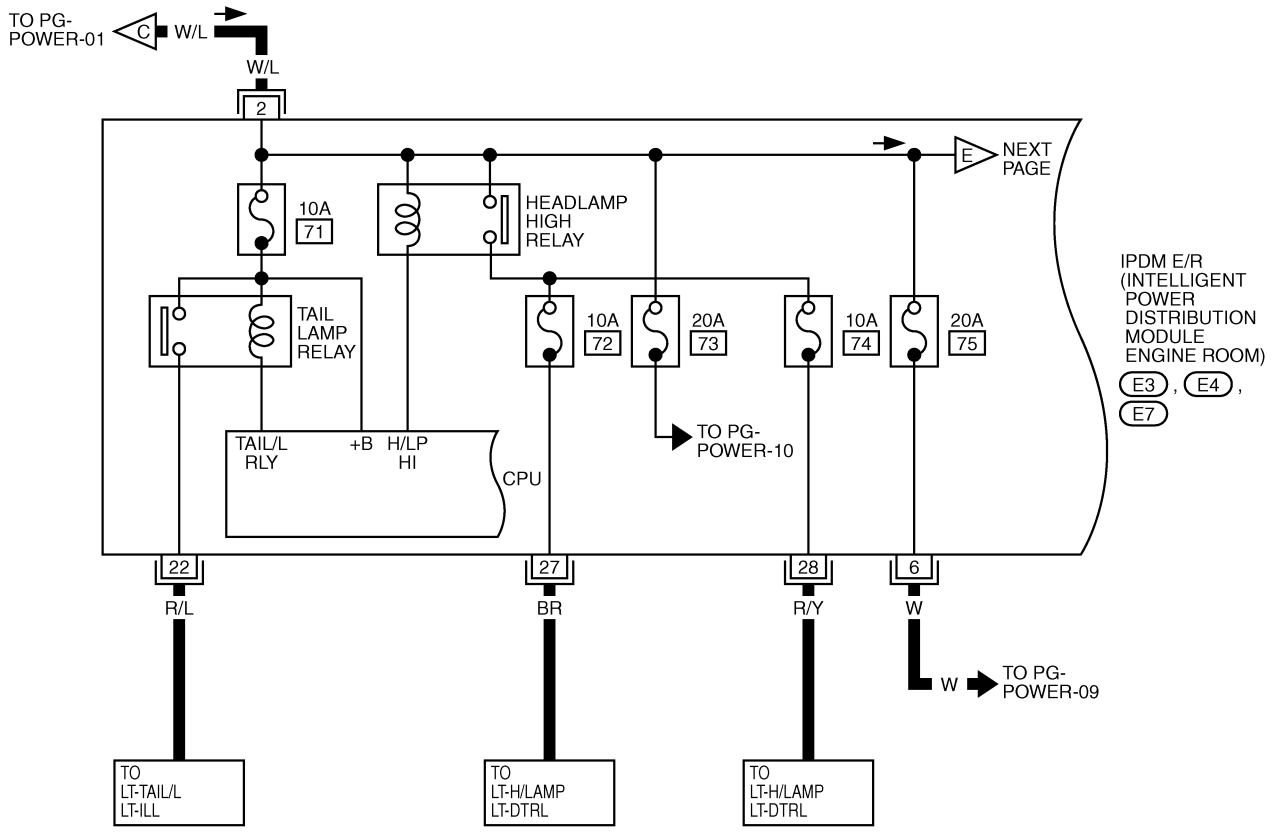

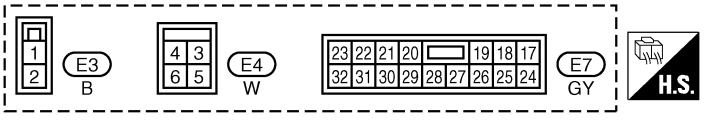

TKWT1642E

PG-POWER-04

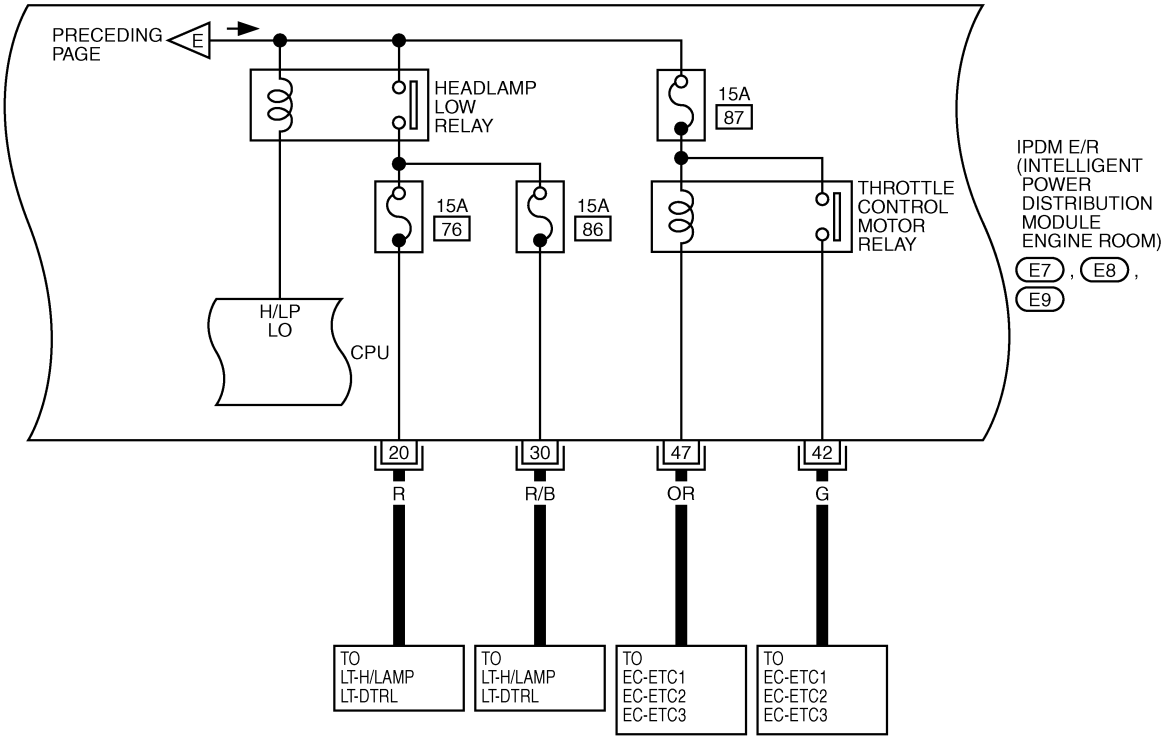

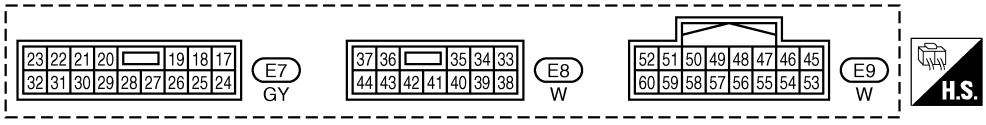

TKWT1643E

PG-POWER-05

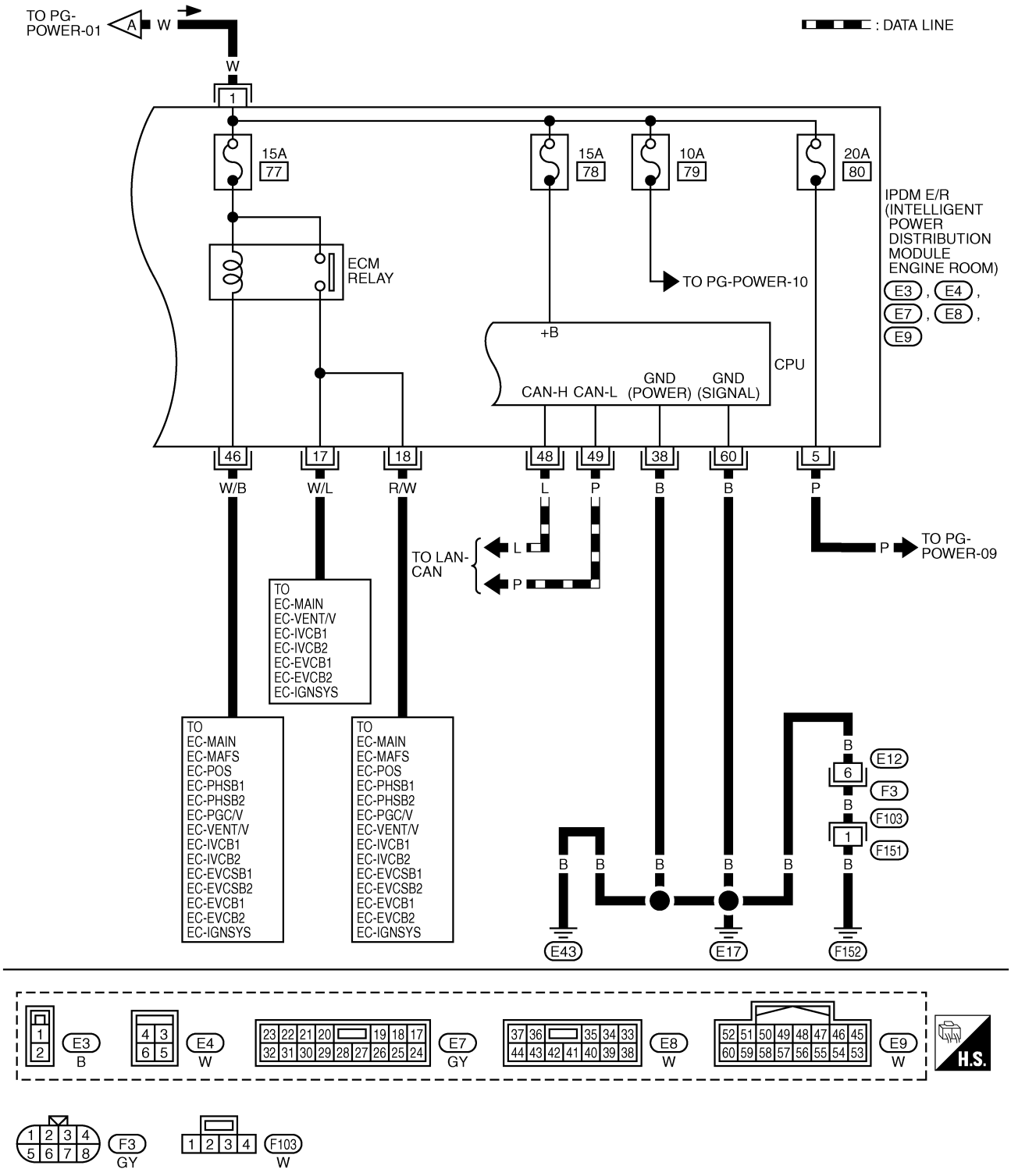

TKWT3244E

ACCESSORY POWER SUPPLY — IGNITION SW. IN “ACC” OR “ON”

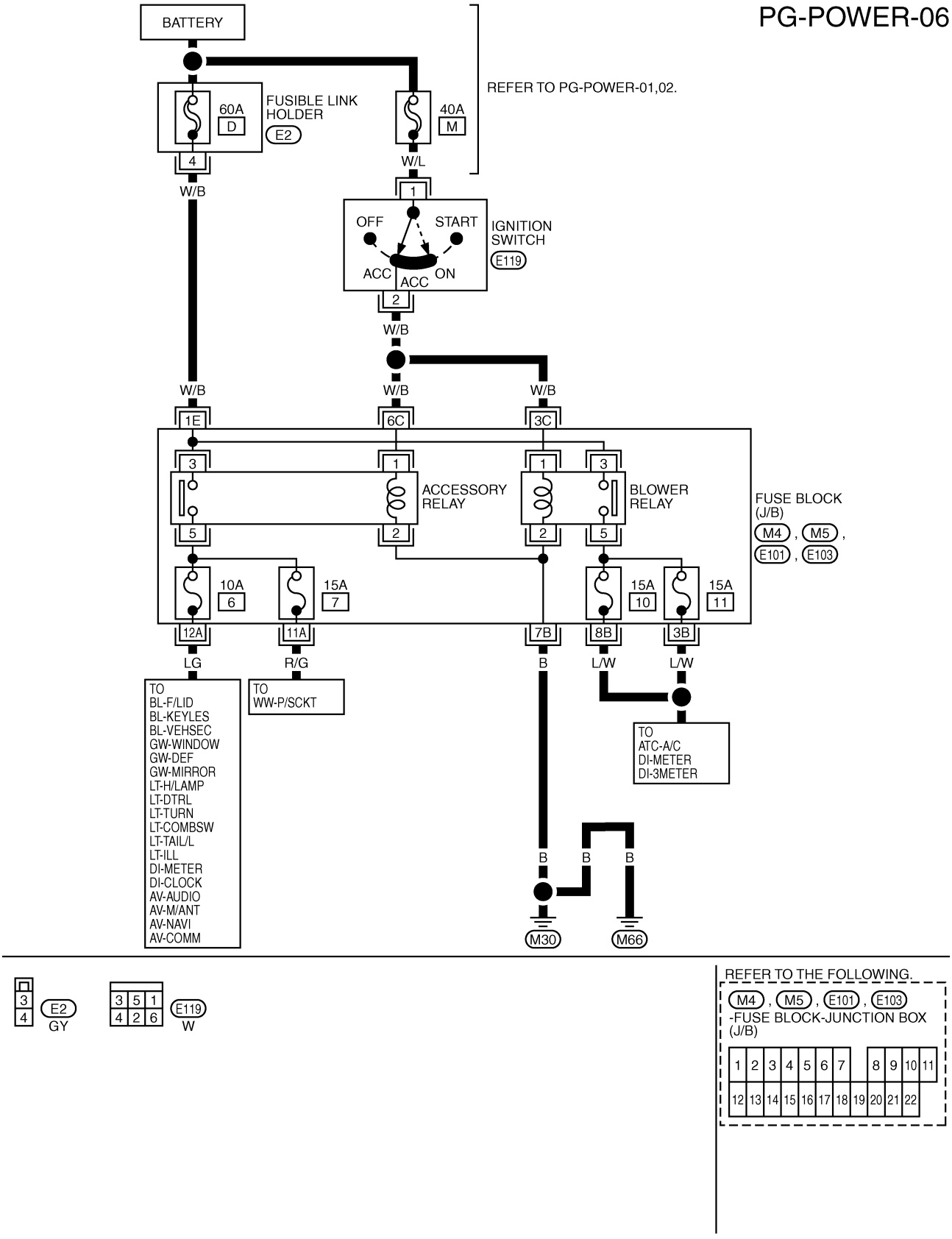

IGNITION POWER SUPPLY — IGNITION SW. IN “ON” AND/OR “START”

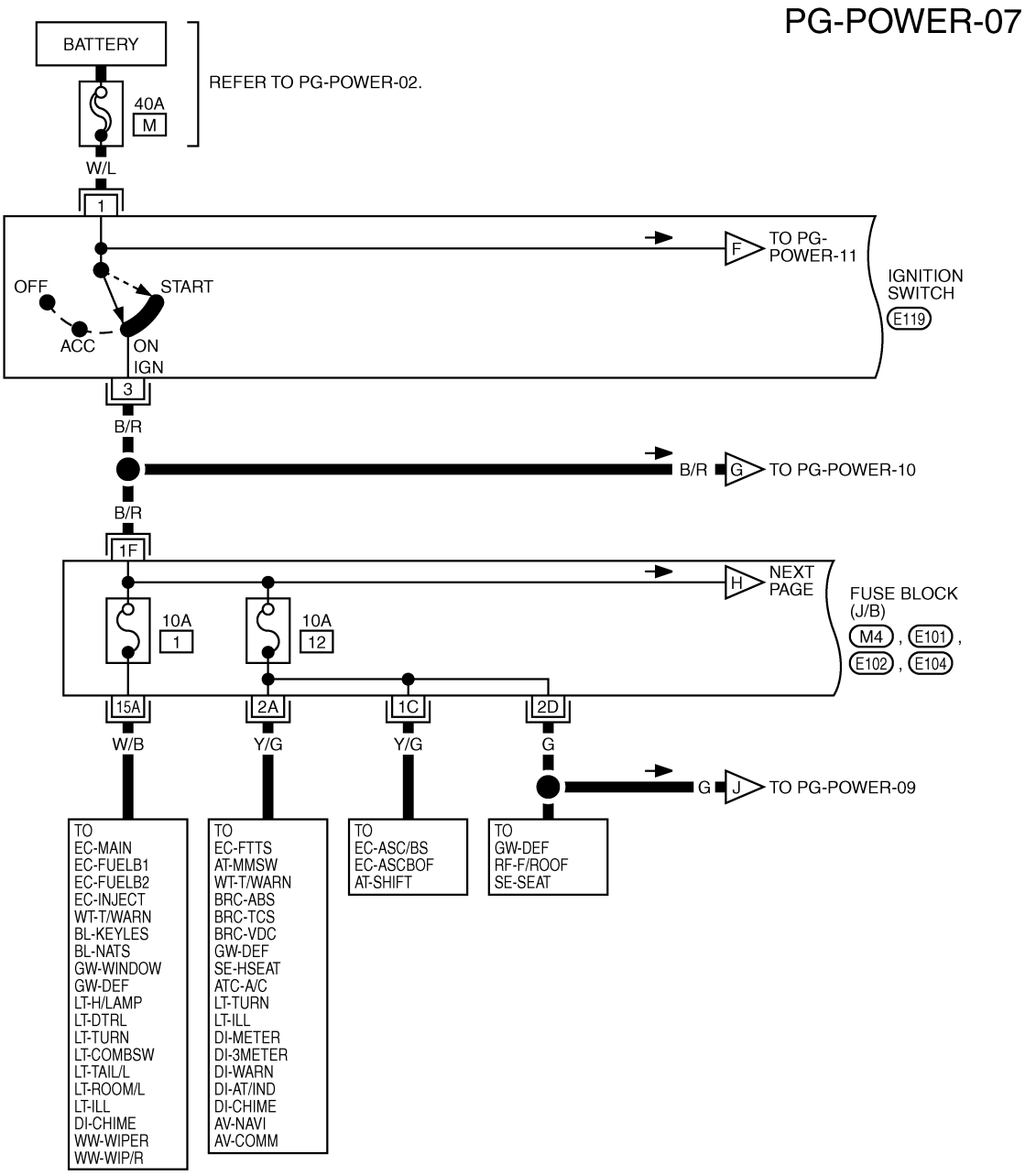

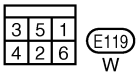

REFER TO THE FOLLOWING.

M4 , E101 , E102 , E104
-FUSE BLOCK-JUNCTION BOX (J/B)

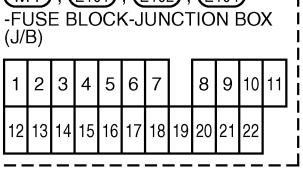

TKWT2350E

PG-POWER-08

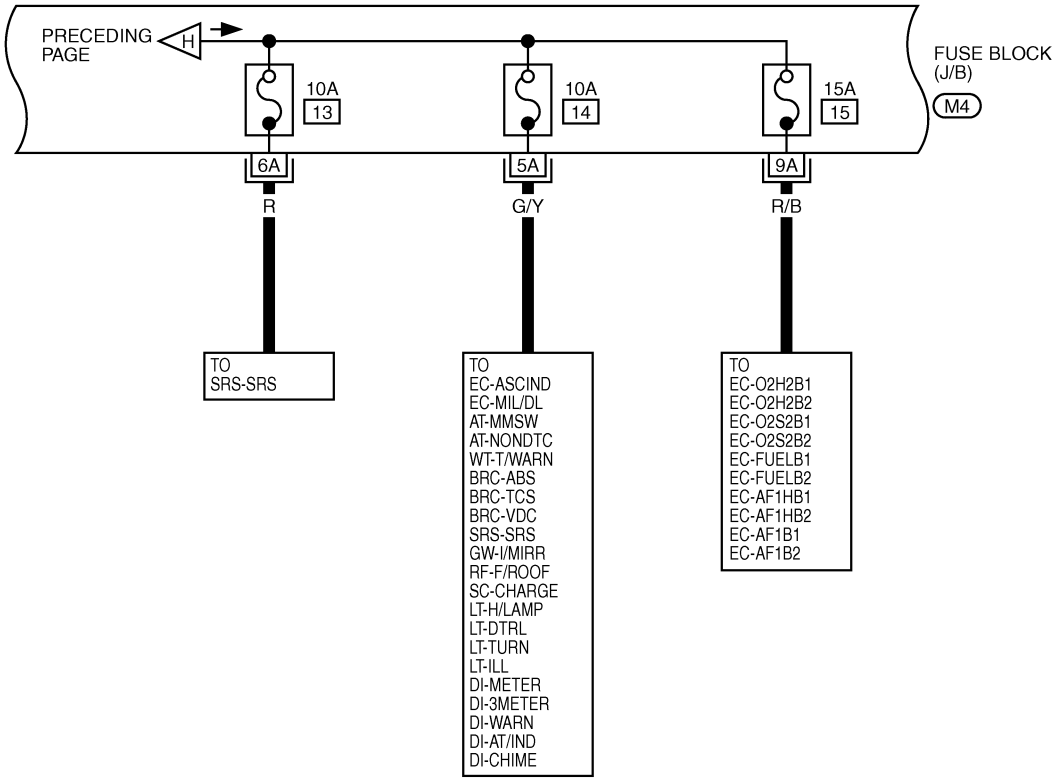

REFER TO THE FOLLOWING.

M4 -FUSE BLOCK-JUNCTION BOX (J/B)

1	2	3	4	5	6	7		8	9	10	11
12	13	14	15	16	17	18	19	20	21	22	

TKWM1379E

PG-POWER-09

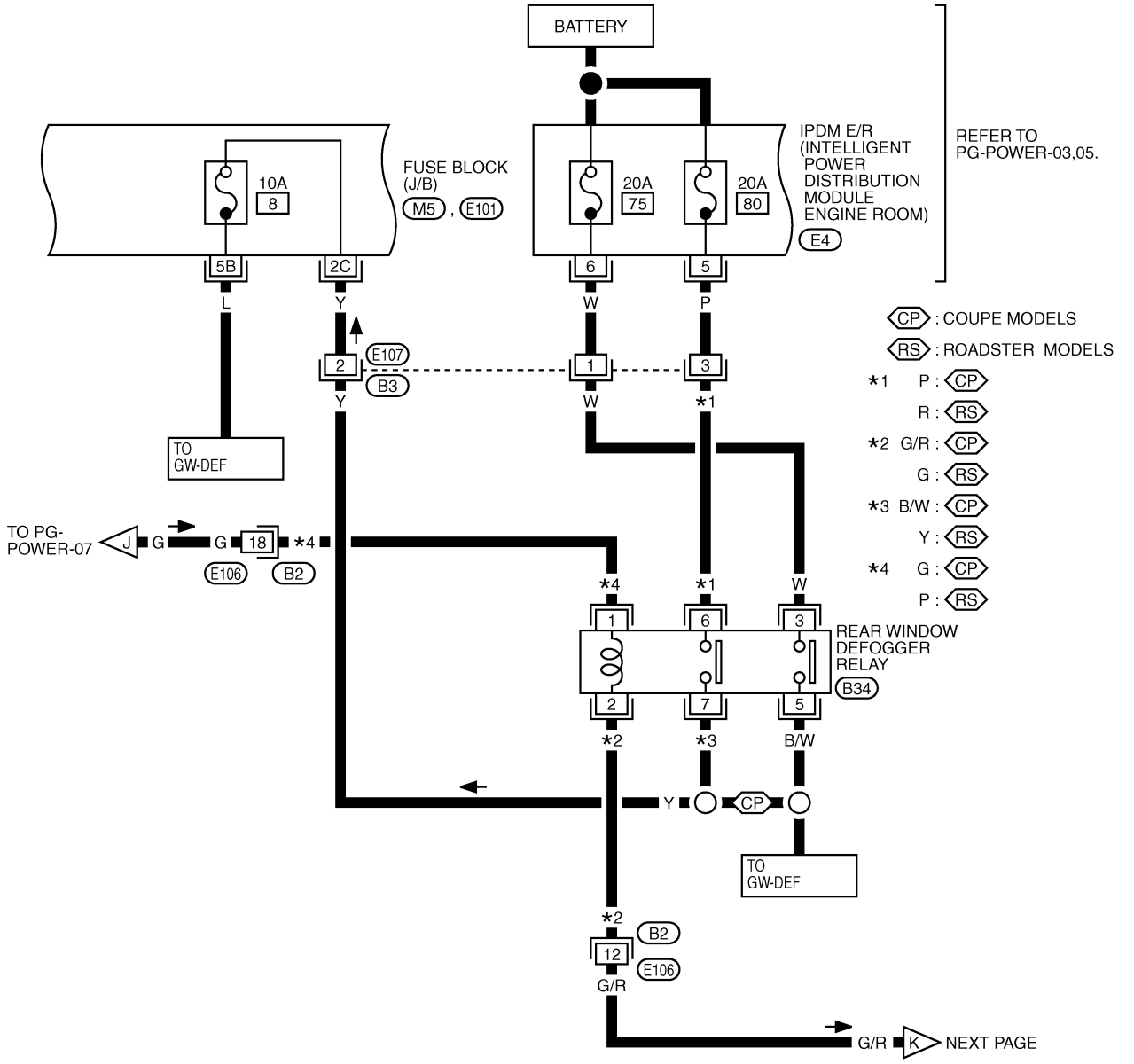

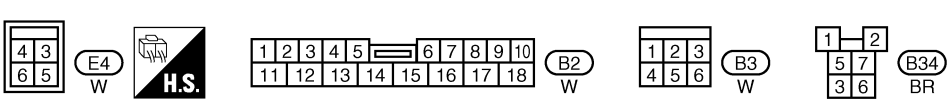

REFER TO THE FOLLOWING.

M5 , E101 -FUSE BLOCK-JUNCTION BOX (J/B)

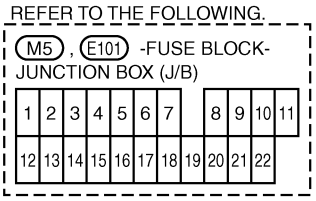

TKWT2522E

PG-POWER-10

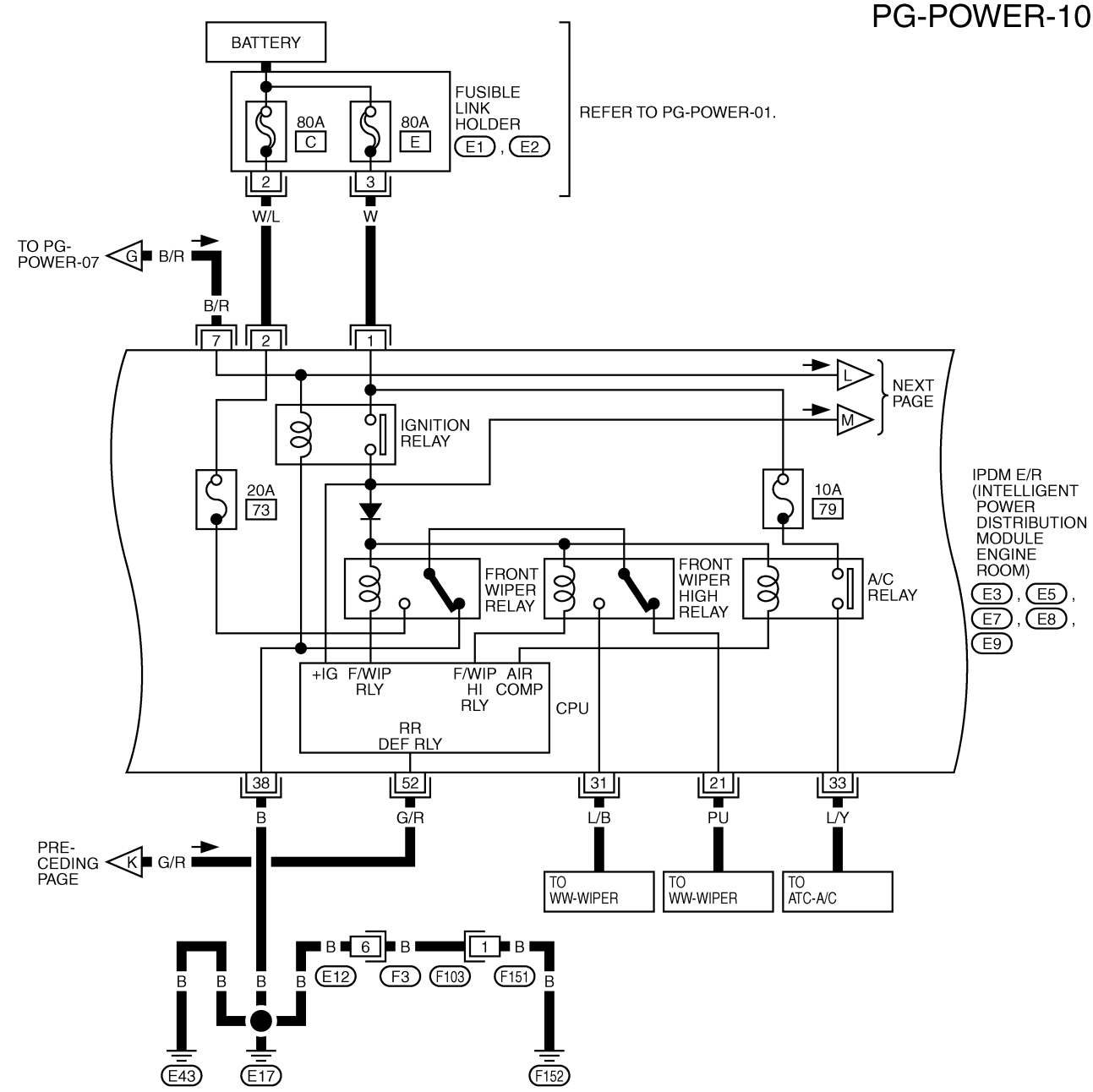

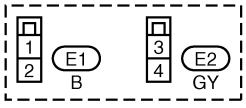

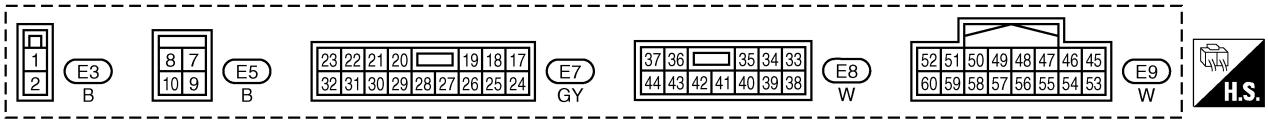

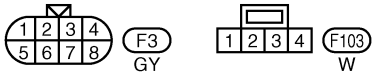

TKWT1649E

PG-POWER-11

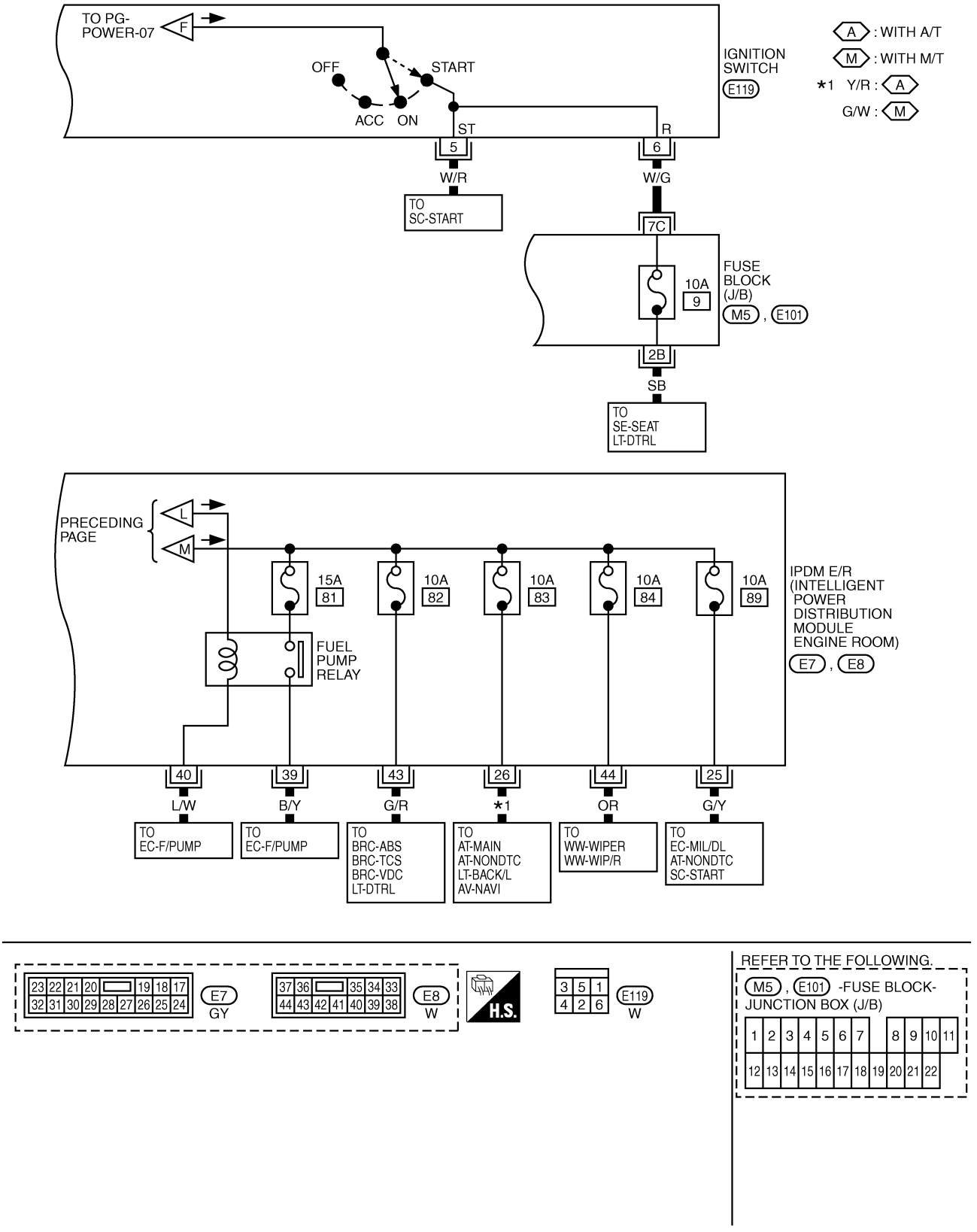
TO PG-POWER-07
F
OFF
START
ACC
ON
IGNITION SWITCH
E119
A : WITH A/T
M : WITH M/T
*1 Y/R : A
G/W : M
ST
5
R
6
W/R
W/G
TO SC-START
7C
FUSE BLOCK (J/B)
10A
9
M5 , E101
2B
SB
TO SE-SEAT LT-DTRL
PRECEDING PAGE
L
M
15A
81
10A
82
10A
83
10A
84
10A
89
FUEL PUMP RELAY
IPDM E/R (INTELLIGENT POWER DISTRIBUTION MODULE ENGINE ROOM)
E7 , E8
40
39
43
26
44
25
L/W
B/Y
G/R
*1
OR
G/Y
TO EC-F/PUMP
TO EC-F/PUMP
TO BRC-ABS BRC-TCS BRC-VDC LT-DTRL
TO AT-MAIN AT-NONDTC LT-BACK/L AV-NAVI
TO WW-WIPER WW-WIP/R
TO EC-MIL/DL AT-NONDTC SC-START
23 22 21 20 19 18 17
32 31 30 29 28 27 26 25 24
E7
GY
37 36 35 34 33
44 43 42 41 40 39 38
E8
W
H.S.
3 5 1
4 2 6
E119
W
REFER TO THE FOLLOWING.
M5 , E101 -FUSE BLOCK-JUNCTION BOX (J/B)
1 2 3 4 5 6 7 8 9 10 11
12 13 14 15 16 17 18 19 20 21 22
TKWB0268E

Fuse

AKS0012D

- If fuse is blown, be sure to eliminate cause of malfunction before installing new fuse.
- Use fuse of specified rating. Never use fuse of more than specified rating.
- Do not partially install fuse; always insert it into fuse holder properly.
- Remove fuse for “ELECTRICAL PARTS (BAT)” if vehicle is not used for a long period of time.

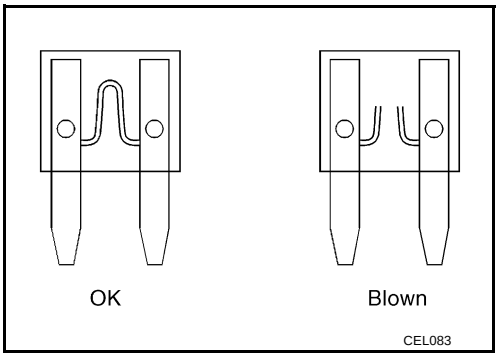

Fusible Link

AKS0012E

A melted fusible link can be detected either by visual inspection or by feeling with finger tip. If its condition is questionable, use circuit tester or test lamp.

CAUTION:

- **If fusible link should melt, it is possible that critical circuit (power supply or large current carrying circuit) is shorted. In such a case, carefully check and eliminate cause of malfunction.**
- **Never wrap outside of fusible link with vinyl tape. Important: Never let fusible link touch any other wiring harness, vinyl or rubber parts.**

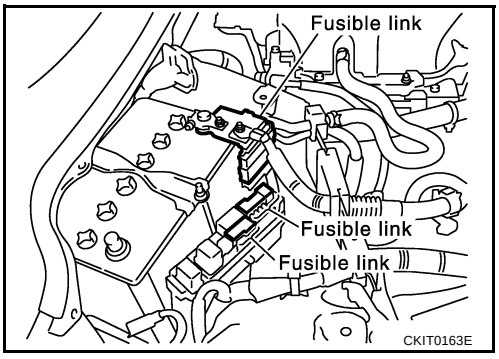

Circuit Breaker

AKS0012F

The PTC thermistor generates heat in response to current flow. The temperature (and resistance) of the thermistor element varies with current flow. Excessive current flow will cause the element's temperature to rise. When the temperature reaches a specified level, the electrical resistance will rise sharply to control the circuit current. Reduced current flow will cause the element to cool. Resistance falls accordingly and normal circuit current flow is allowed to resume.

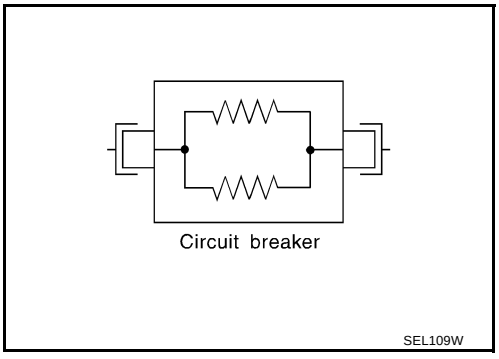

IPDM E/R (INTELLIGENT POWER DISTRIBUTION MODULE ENGINE ROOM)

PFP:284B7

System Description

AKS00A2H

- IPDM E/R (Intelligent Power Distribution Module Engine Room) integrates the relay box and fuse block which were originally placed in engine room. It controls integrated relay via IPDM E/R control circuit.
- IPDM E/R-integrated control circuit performs ON-OFF operation of relay, CAN communication control, hood switch signal reception, etc.
- It controls operation of each electrical part via ECM, BCM and CAN communication lines.

CAUTION:
None of the IPDM E/R-integrated relays can be removed.

SYSTEMS CONTROLLED BY IPDM E/R

1. Lamp control
   Using CAN communication line, it receives signal from BCM and controls the following lamps:
   - Headlamps (Hi, Lo)
   - Parking lamps
   - Tail lamps
   - License plate lamps
2. Wiper control
   Using CAN communication line, it receives signals from BCM and controls the front wipers.
3. Rear window defogger relay control
   Using CAN communication line, it receives signals from BCM and controls the rear window defogger relay.
4. A/C compressor control
   Using CAN communication line, it receives signals from ECM and controls the A/C relay.
5. Cooling fan control
   Using CAN communication line, it receives signals from ECM and controls cooling fan relay.

CAN COMMUNICATION LINE CONTROL

With CAN communication, by connecting each control unit using two communication lines (CAN L line, CAN H line), it is possible to transmit maximum amount of information with minimum wiring. Each control unit can transmit and receive data, and reads necessary information only.

1. Fail-safe control
   - When CAN communication with other control units is impossible, IPDM E/R performs fail-safe control. After CAN communication recovers normally, it also returns to normal control.
   - Operation of control parts by IPDM E/R during fail-safe mode is as follows:

Controlled system	Fail-safe mode
Headlamp	● With the ignition switch ON, the headlamp (low) is ON. ● With the ignition switch OFF, the headlamp (low) is OFF.
Tail and parking lamps	● With the ignition switch ON, the tail and parking lamps is ON. ● With the ignition switch OFF, the tail and parking lamps is OFF.
Cooling fan	● With the ignition switch ON, the cooling fan HI operates. ● With the ignition switch OFF, the cooling fan stops.
Front wiper	Until the ignition switch is turned off, the front wiper LO and HI remains in the same status it was in just before fail–safe control was initiated.
Rear window defogger	Rear window defogger relay OFF
A/C compressor	A/C compressor OFF

IPDM E/R STATUS CONTROL

In order to save power, IPDM E/R switches status by itself based on each operating condition.

1. CAN communication status
   - CAN communication is normally performed with other control units.
   - Individual unit control by IPDM E/R is normally performed.
   - When sleep request signal is received from BCM, mode is switched to sleep waiting status.
2. Sleep waiting status
   - Process to stop CAN communication is activated.
   - All systems controlled by IPDM E/R are stopped. When 3 seconds have elapsed after CAN communication with other control units is stopped, mode switches to sleep status.
3. Sleep status
   - IPDM E/R operates in low power mode.
   - CAN communication is stopped.
   - When a change in CAN communication line is detected, mode switches to CAN communication status.
   - When a change hood switch or ignition switch signal is detected, mode switches to CAN communication status.

CAN Communication System Description

AKS00A2I

CAN (Controller Area Network) is a serial communication line for real time application. It is an on-vehicle multiplex communication line with high data communication speed and excellent error detection ability. Modern vehicles are equipped with many electronic control units and each control unit shares information and links with other control units during operation (not independent). In CAN communication, control units are connected with 2 communication lines (CAN H line, CAN L line) allowing a high rate of information transmission with less wiring. Each control unit transmits/receives data but selectively reads required data only.

CAN Communication Unit

AKS00A2J

Refer to LAN-21, "CAN Communication Unit" .

Function of Detecting Ignition Relay Malfunction

AKS00A2K

- When contact point of integrated ignition relay is stuck and cannot be turned OFF, IPDM E/R turns ON tail and parking lamps for 10 minutes to indicate ignition relay malfunction.
- When a state of ignition relay having built-in does not agree with a state of Ignition switch signal input by a CAN communication from BCM, IPDM E/R lets tail lamp relay operate.

Ignition switch signal	Ignition relay status	Tail lamp relay
ON	ON	—
OFF	OFF	—
ON	OFF	—
OFF	ON	ON (10 minutes)

NOTE:
When the ignition switch is turned ON, the tail lamp is OFF.

CONSULT-II Function (IPDM E/R)

AKS00A2L

CONSULT-II can display each diagnostic item using the diagnostic test modes shown following.

Inspection Item, Diagnosis Mode	Description
SELF-DIAG RESULTS	The IPDM E/R performs diagnosis of the CAN communication and self-diagnosis.
DATA MONITOR	The input/output data of the IPDM E/R is displayed in real time.
CAN DIAG SUPPORT MNTR	The result of transmit/receive diagnosis of CAN communication can be read.
ACTIVE TEST	The IPDM E/R sends a drive signal to electronic components to check their operation.

CONSULT-II BASIC OPERATION

CAUTION:

If CONSULT-II is used with no connection of CONSULT-II CONVERTER, malfunctions might be detected in self-diagnosis depending on control unit which carry out CAN communication.

1. With the ignition switch OFF, connect CONSULT-II and CONSULT-II CONVERTER to the data link connector, then turn the ignition switch ON.

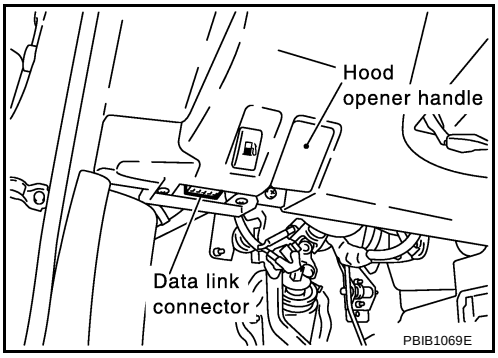

2. Touch “START (NISSAN BASED VHCL)”.

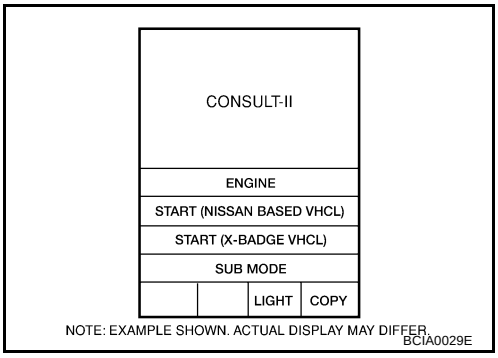

3. Touch “IPDM E/R” on “SELECT SYSTEM” screen.
   If “IPDM E/R” is not displayed, refer to GI-39, "CONSULT-II Data Link Connector (DLC) Circuit" .

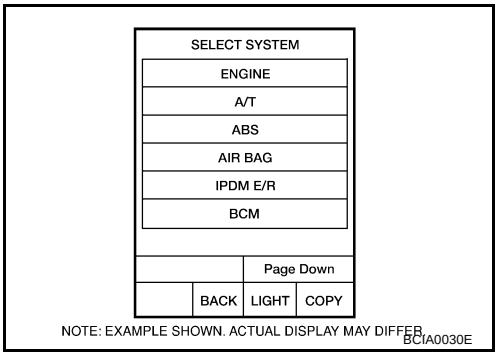

4. Select the desired part to be diagnosed on the “SELECT DIAG MODE” screen.

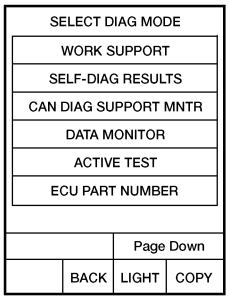

NOTE: EXAMPLE SHOWN. ACTUAL DISPLAY MAY DIFFER.
BCIA0031E

SELF-DIAG RESULTS

Operation Procedure

1. Touch “SELF-DIAG RESULTS” on “SELECT DIAG MODE” screen.
2. Check display content in self-diagnostic results.

Display Item List

Display Items	CONSULT-II display code	Malfunction detecting condition	TIME		Possible causes
			CRNT	PAST	
NO DTC IS DETECTED.FURTHER TESTING MAY BE REQUIRED.	-	-	-	-	-
CAN COMM CIRC	U1000	● If CAN communication reception/transmission data has a malfunction, or if any of the control units malfunction, data reception/transmission cannot be confirmed. ● When the data in CAN communication is not received before the specified time	×	×	Any of or several items below have errors. ● TRANSMIT DIAG ● ECM ● BCM/SEC

NOTE:

The details for display of the period are as follows:

- CRNT: Error currently detected with IPDM E/R.
- PAST: Error detected in the past and memorized with IPDM E/R.

DATA MONITOR

Operation Procedure

1. Touch “DATA MONITOR” on “SELECT DIAG MODE” screen.
2. Touch “ALL SIGNALS”, “MAIN SIGNALS” or “SELECTION FROM MENU” on the “SELECT MONITOR ITEM” screen.

ALL SIGNALS	All items will be monitored.
MAIN SIGNALS	Monitor the predetermined item.
SELECTION FROM MENU	Select any item for monitoring.

3. Touch the required monitoring item on “SELECTION FROM MENU”. In “ALL SIGNALS”, all items are monitored. In “MAIN SIGNALS”, predetermined items are monitored.
4. Touch “START”.
5. Touch “RECORD” while monitoring to record the status of the item being monitored. To stop recording, touch “STOP”.

All Items, Main Items, Selection From Menu

Item name	CONSULT-II screen display	Display or unit	SELECT MONITOR ITEM			Description
			ALL SIG-NALS	MAIN SIG-NALS	SELEC-TION FROM MENU	
Motor fan request	MOTOR FAN REQ	1/2/3/4	×	×	×	Signal status input from ECM
Compressor request	AC COMP REQ	ON/OFF	×	×	×	Signal status input from ECM
Tail & clear request	TAIL&CLR REQ	ON/OFF	×	×	×	Signal status input from BCM
H/L LO request	HL LO REQ	ON/OFF	×	×	×	Signal status input from BCM
H/L HI request	HL HI REQ	ON/OFF	×	×	×	Signal status input from BCM
Front fog request	FR FOG REQ*1	ON/OFF	×	×	×	—
Head lamp washer request	HL WASHER REQ*1	ON/OFF	×		×	—
Front wiper request	FR WIP REQ	STOP/1LOW/ LOW/HI	×	×	×	Signal status input from BCM
Wiper auto stop	WIP AUTO STOP	ACT P/STOP P	×	×	×	Output status of IPDM E/R
Wiper protection	WIP PROT	OFF/Block	×	×	×	Control status of IPDM E/R
Starter request	ST RLY REQ*2	ON/OFF	×		×	Status of input signal
Ignition relay status	IGN RLY	ON/OFF	×	×	×	Ignition relay status monitored with IPDM E/R
Rear window defogger request	RR DEF REQ	ON/OFF	×	×	×	Signal status input from BCM
Oil pressure switch	OIL P SW *1	OPEN/CLOSE	×		×	—
Day time light request	DTRL REQ*1	ON/OFF	×		×	—
Hood switch	HOOD SW*1	ON/OFF	×		×	—
Theft warning horn request	THFT HRN REQ	ON/OFF	×		×	Signal status input from BCM
Horn chirp	HORN CHIRP	ON/OFF	×		×	Output status of IPDM E/R

NOTE:

- Perform monitoring of IPDM E/R data with the ignition switch ON. When the ignition switch is at ACC, the display may not be correct.
- *1: This items is displayed, but does not function.
- *2: The vehicle without intelligent key system displays only ON without change.

ACTIVE TEST

Operation Procedure

1. Touch “ACTIVE TEST” on “SELECT DIAG MODE” screen.
2. Touch item to be tested.
3. Touch “START”, and confirm its operation.
4. Touch “STOP” while testing to stop the operation.

Test item	CONSULT-II screen display	Description
Tail lamp operation	TAIL LAMP	With a certain ON-OFF operation, the tail lamp relay can be operated.
Rear window defogger operation	REAR DEFOGGER	With a certain ON-OFF operation, the rear window defogger relay can be operated.
Front wiper (HI, LO) operation	FRONT WIPER	With a certain operation (OFF, HI ON, LO ON), the front wiper relay (Lo, Hi) can be operated.
Cooling fan operation	MOTOR FAN	With a certain operation (1,2,3,4), the cooling fan can be operated.
Headlamp washer [NOTE 1]	HEAD LAMP WASHER	—
Lamp (HI, LO, FOG [NOTE 2]) operation	LAMPS	With a certain operation (OFF, HI ON, LO ON, FOG ON [NOTE]), the lamp relay (Lo, Hi, Fog [NOTE]) can be operated.
Horn operation	HORN	Push “ON” button, horn relay operates 20ms.

NOTE:

1. Headlamp washer item is displayed, but it cannot be tested.
2. Fog lamp item is displayed, but it cannot be tested.

Auto Active Test

AKS00A2M

DESCRIPTION

In auto active test mode, operation inspection can be performed when IPDM E/R sends a drive signal to the following systems:

- Rear window defogger
- Front wipers
- Tail lamps and parking lamps
- Headlamps (Hi, Lo)
- A/C compressor (magnetic clutch)
- Cooling fan

OPERATION PROCEDURE

1. Close hood and front door (passenger side), and then lift wiper arms away from windshield (to prevent glass damage by wiper operation).

   NOTE:
   When auto active test is performed with hood opened, sprinkle water on windshield beforehand.
2. Turn ignition switch OFF.
3. Turn ignition switch ON, and, within 20 seconds, press drivers front door switch 10 times (close other door). Then turn ignition switch OFF.
4. Turn ignition switch ON within 10 seconds after ignition switch OFF.
5. When auto active test mode is actuated.
6. After a series of operations is repeated three times, auto active test is completed.

   NOTE:
   When auto active test mode has to be cancelled halfway, turn ignition switch OFF.

   CAUTION:
   Be sure to inspect BL-39, "Door Switch Check" when the auto active test cannot be performed.

INSPECTION IN AUTO ACTIVE TEST MODE

When auto active test mode is actuated, the following eight steps are repeated three times.

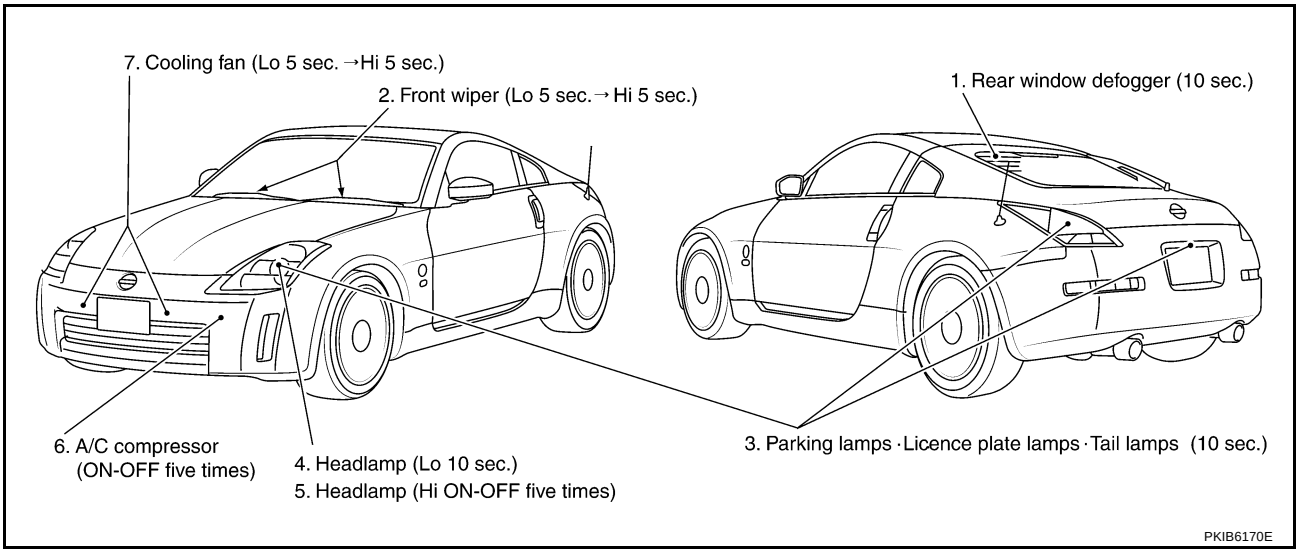

NOTE:
It takes 10 seconds from 3 to 4.

Concept of Auto Active Test

- IPDM E/R actuates auto active test mode when it receives door switch signal from BCM via CAN communication line. Therefore, when auto active test mode is activated successfully, CAN communication between IPDM E/R and BCM is normal.
- If any of systems controlled by IPDM E/R cannot be operated, possible cause can be easily diagnosed using auto active test.

Diagnosis chart in auto active test mode

Symptom	Inspection contents		Possible cause
Rear window defogger does not operate.	Perform auto active test. Does rear window defogger operate?	YES	● BCM signal input circuit
		NO	● Rear window defogger relay circuit ● Open circuit of rear window defogger ● IPDM E/R malfunction
Any of front wipers, tail and parking lamps, front fog lamps, and head lamps (Hi, Lo) do not operate.	Perform auto active test. Does system in question operate?	YES	● BCM signal input system
		NO	● Lamp/wiper motor malfunction ● Lamp/wiper motor ground circuit malfunction ● Harness/connector malfunction between IPDM E/R and system in question ● IPDM E/R (integrated relay) malfunction
A/C compressor does not operate.	Perform auto active test. Does magnetic clutch operate?	YES	● BCM signal input circuit ● CAN communication signal between BCM and ECM. ● CAN communication signal between ECM and IPDM E/R
		NO	● Magnetic clutch malfunction ● Harness/connector malfunction between IPDM E/R and magnetic clutch ● IPDM E/R (integrated relay) malfunction
Cooling fan does not operate.	Perform auto active test. Does cooling fan operate?	YES	● ECM signal input circuit ● CAN communication signal between ECM and IPDM E/R
		NO	● Cooling fan motor malfunction ● Harness/connector malfunction between IPDM E/R and cooling fan motor ● IPDM E/R (integrated relay) malfunction

Schematic

AKS00A2N

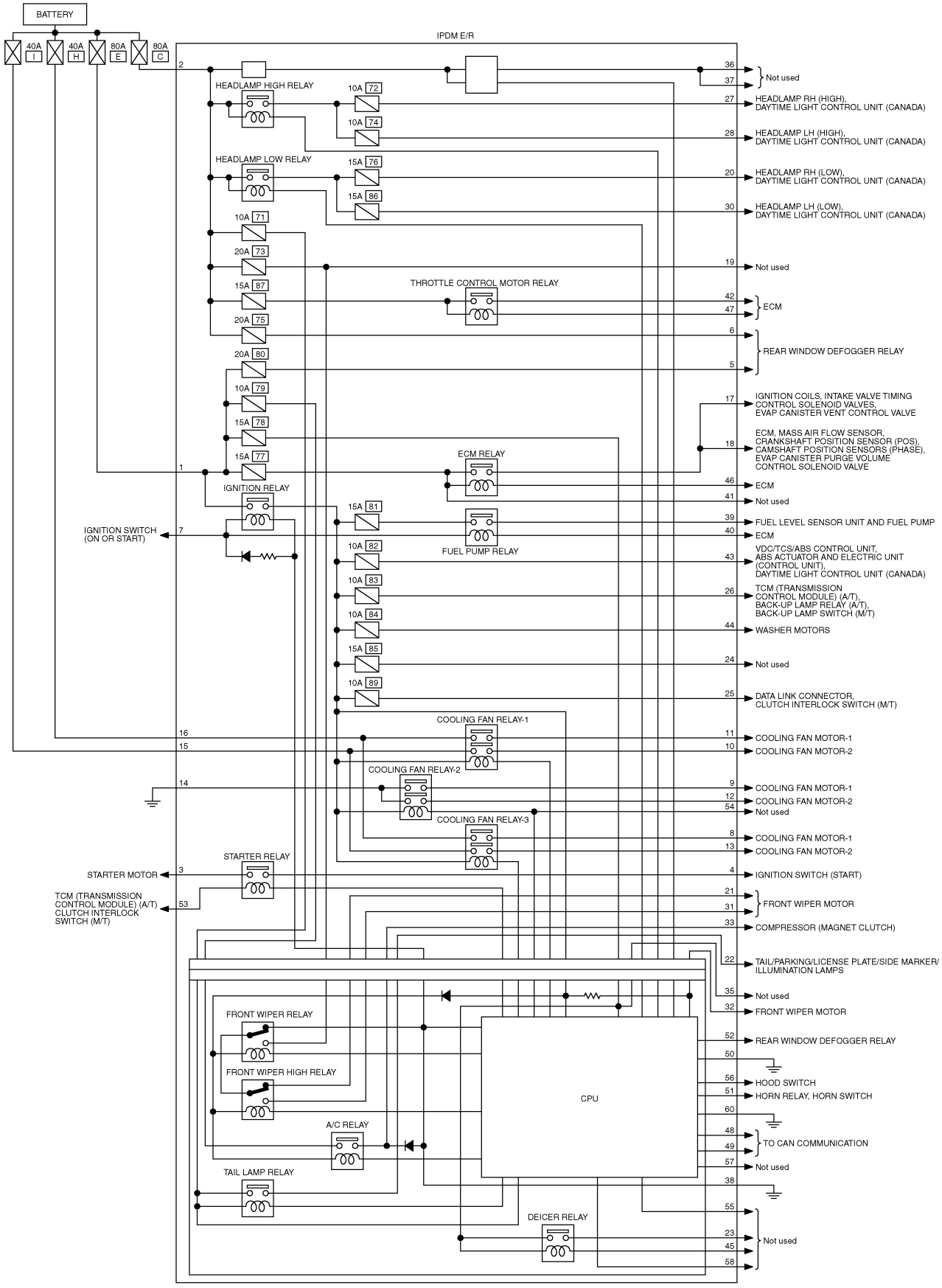

IPDM E/R Terminal Arrangement

AKS00A2O

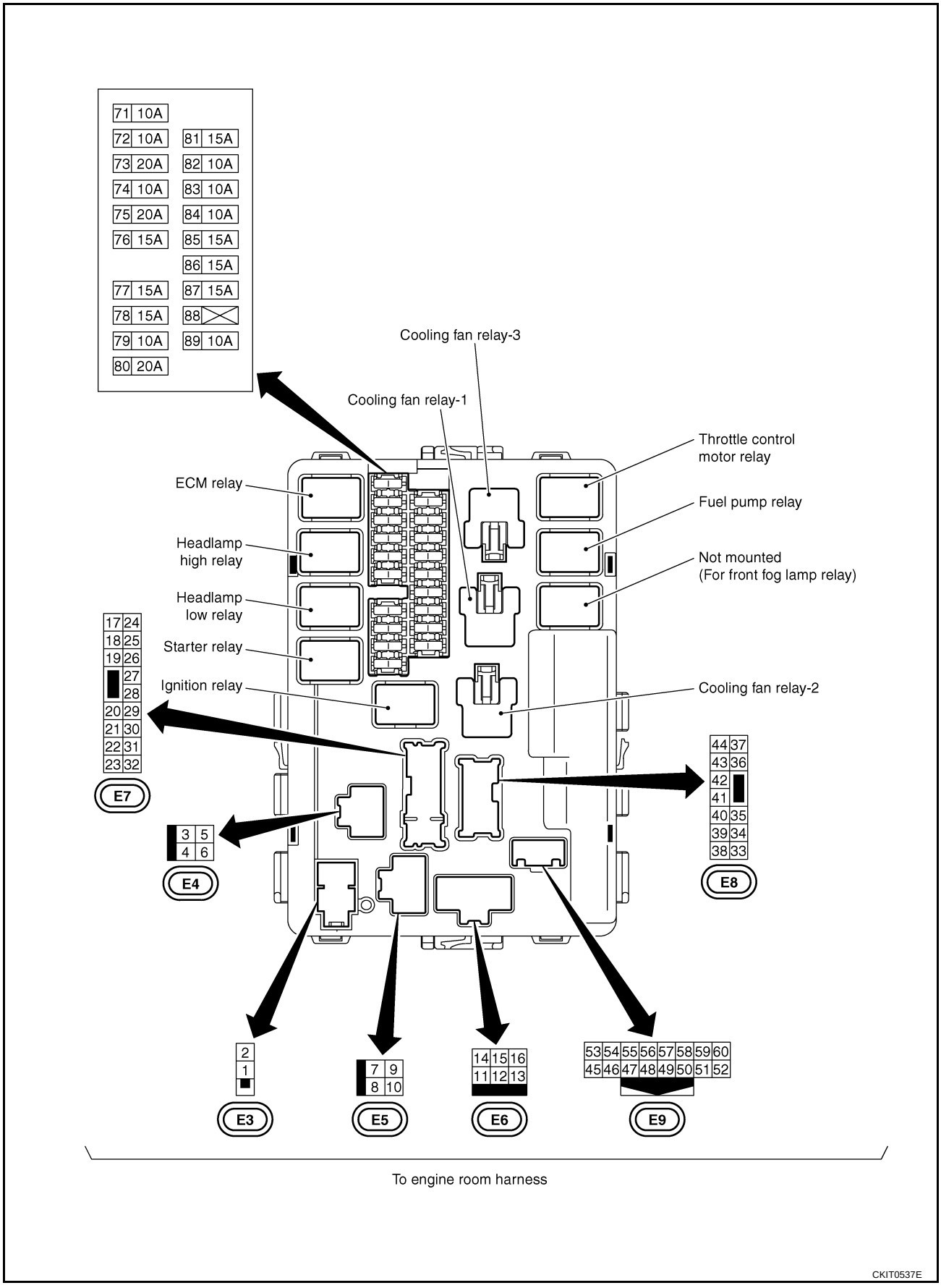

IPDM E/R Power/Ground Circuit Inspection

AKS00A2P

1. CHECK FUSE AND FUSIBLE LINK

Make sure the following fusible links or IPDM E/R fuses are not blown.

Terminal No.	Signal name	Fuse and fusible link No.
1, 2	Battery power	C
		E
		71
		78

OK or NG

OK >> GO TO 2.
NG >> If fuse or fusible link is blown, be sure to eliminate cause of malfunction before installing new fuse or fusible link.

2. CHECK POWER SUPPLY CIRCUIT

1. Turn ignition switch OFF.
2. Disconnect IPDM E/R harness connector E3.
3. Check voltage between IPDM E/R harness connector E3 terminals 1 (W), 2 (W/L) and ground.

1, 2 – Ground : Battery voltage

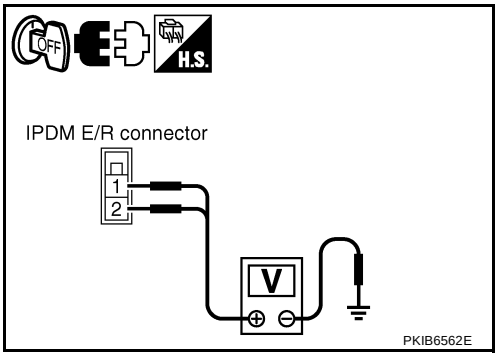

OK or NG

OK >> GO TO 3.
NG >> Replace IPDM E/R power supply circuit harness.

3. CHECK GROUND CIRCUIT

1. Disconnect IPDM E/R harness connectors E8 and E9.
2. Check continuity between IPDM E/R harness connectors E8 terminal 38 (B), E9 terminal 50 (B), 60 (B) and ground.

38, 50, 60 – Ground : Continuity should exist.

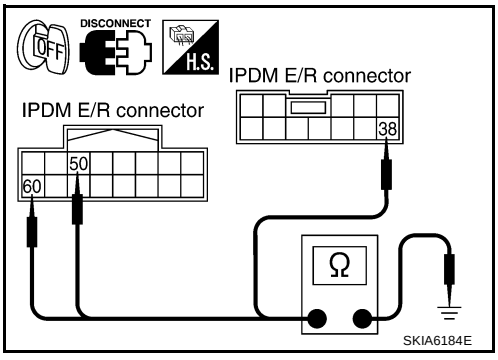

OK or NG

OK >> INSPECTION END
NG >> Replace ground circuit harness of IPDM E/R.

Inspection With CONSULT-II (Self-Diagnosis)

AKS00A2Q

CAUTION:

If CONSULT-II is used with no connection of CONSULT-II CONVERTER, malfunctions might be detected in self-diagnosis depending on control unit which carry out CAN communication.

1. CHECK SELF DIAGNOSTIC RESULT

1. Connect CONSULT-II and select “IPDM E/R” on the Diagnosis System Selection screen.
2. Select “SELF-DIAG RESULTS” on the “SELECT DIAG MODE” screen.
3. Check display content in self diagnostic results.

CONSULT-II display	CONSULT-II display code	TIME		Details of diagnosis result
		CRNT	PAST	
NO DTC IS DETECTED. FURTHER TESTING MAY BE REQUIRED.	-	-	-	No malfunction
CAN COMM CIRC	U1000	×	×	Any of or several items below have errors. ● TRANSMIT DIAG ● ECM ● BCM/SEC

NOTE:

The details for display of the period are as follows:

- CRNT: Error currently detected with IPDM E/R.
- PAST: Error detected in the past and memorized with IPDM E/R.

Contents displayed

NO DTC IS DETECTED.FURTHER TESTING MAY BE REQUIRED.>>INSPECTION END

CAN COMM CIRC>>After print-out of the monitor items, refer to LAN-3, "Precautions When Using CONSULT-II" .

Removal and Installation of IPDM E/R

AKS00A2R

REMOVAL

1. Remove battery. Refer to SC-9, "Removal and Installation" in “Starting and Charging System (SC)” section.
2. Remove IPDM E/R cover A. While pressing pawl on backside of IPDM E/R cover B toward vehicle front to unlock, lift up IPDM E/R.

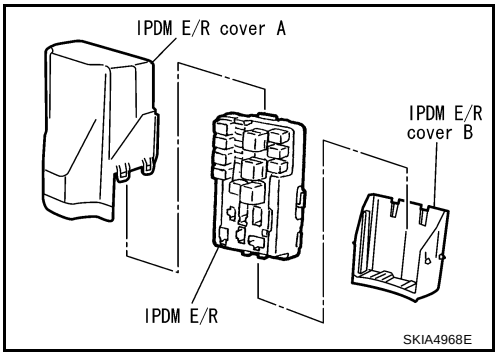

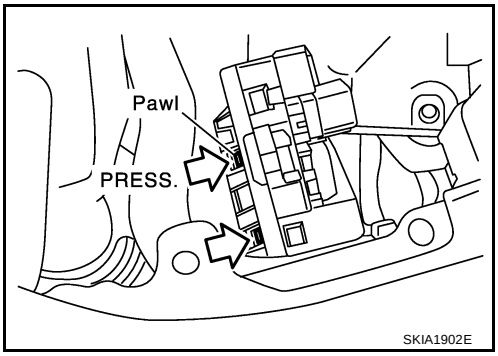

3. While pressing pawls on right and left side of IPDM E/R, remove IPDM E/R cover B from IPDM E/R.
4. Remove harness connector from IPDM E/R.

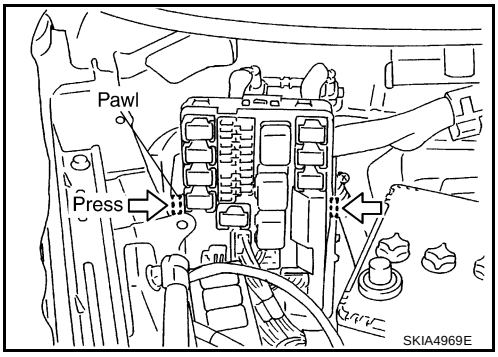

INSTALLATION

Installation is the reverse order of removal.

GROUND

PFP:00011

Ground Distribution

AKS0012P

MAIN HARNESS

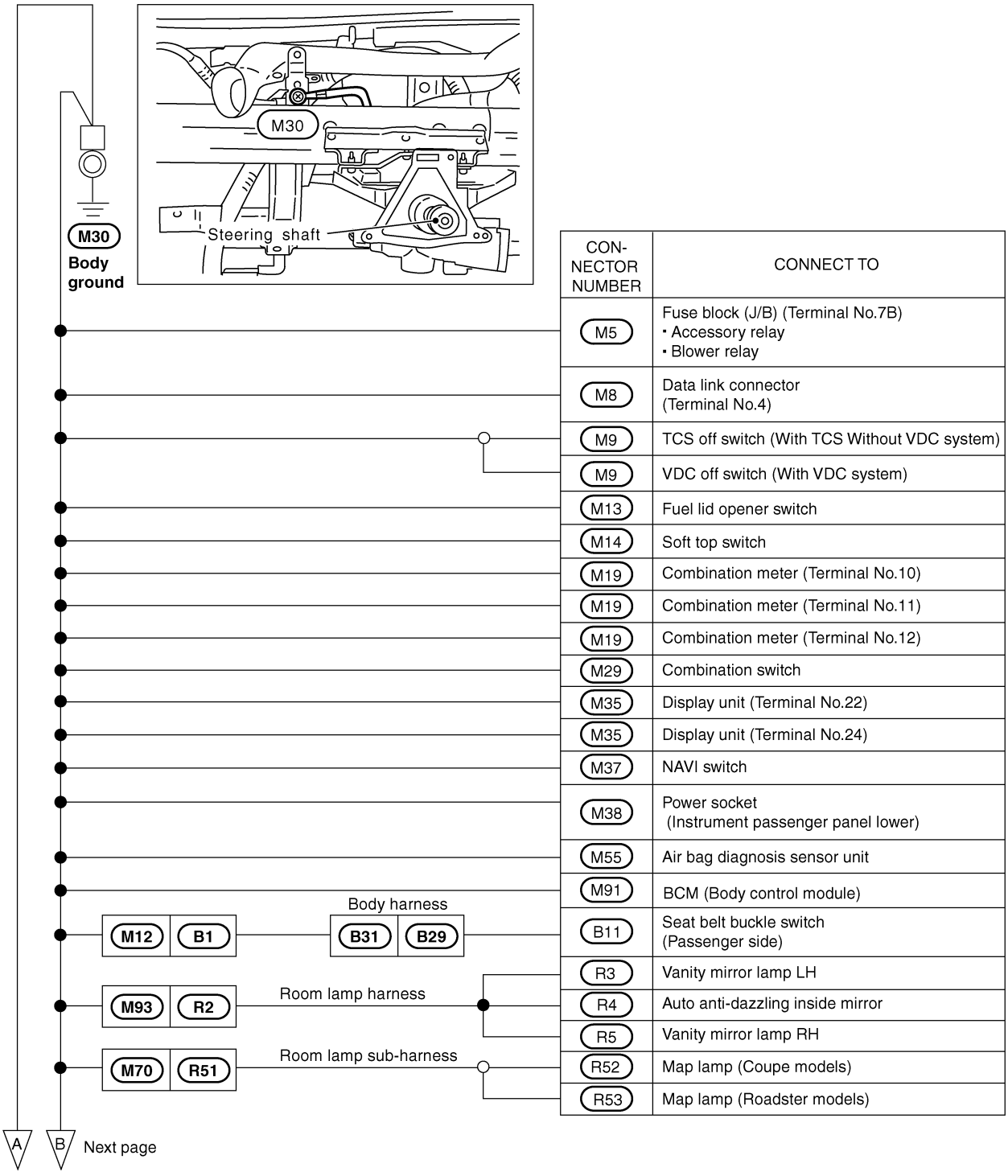

CON-NECTOR NUMBER	CONNECT TO
M5	Fuse block (J/B) (Terminal No.7B) ▪ Accessory relay ▪ Blower relay
M8	Data link connector (Terminal No.4)
M9	TCS off switch (With TCS Without VDC system)
M9	VDC off switch (With VDC system)
M13	Fuel lid opener switch
M14	Soft top switch
M19	Combination meter (Terminal No.10)
M19	Combination meter (Terminal No.11)
M19	Combination meter (Terminal No.12)
M29	Combination switch
M35	Display unit (Terminal No.22)
M35	Display unit (Terminal No.24)
M37	NAVI switch
M38	Power socket (Instrument passenger panel lower)
M55	Air bag diagnosis sensor unit
M91	BCM (Body control module)
B11	Seat belt buckle switch (Passenger side)
R3	Vanity mirror lamp LH
R4	Auto anti-dazzling inside mirror
R5	Vanity mirror lamp RH
R52	Map lamp (Coupe models)
R53	Map lamp (Roadster models)

CKIT0538E

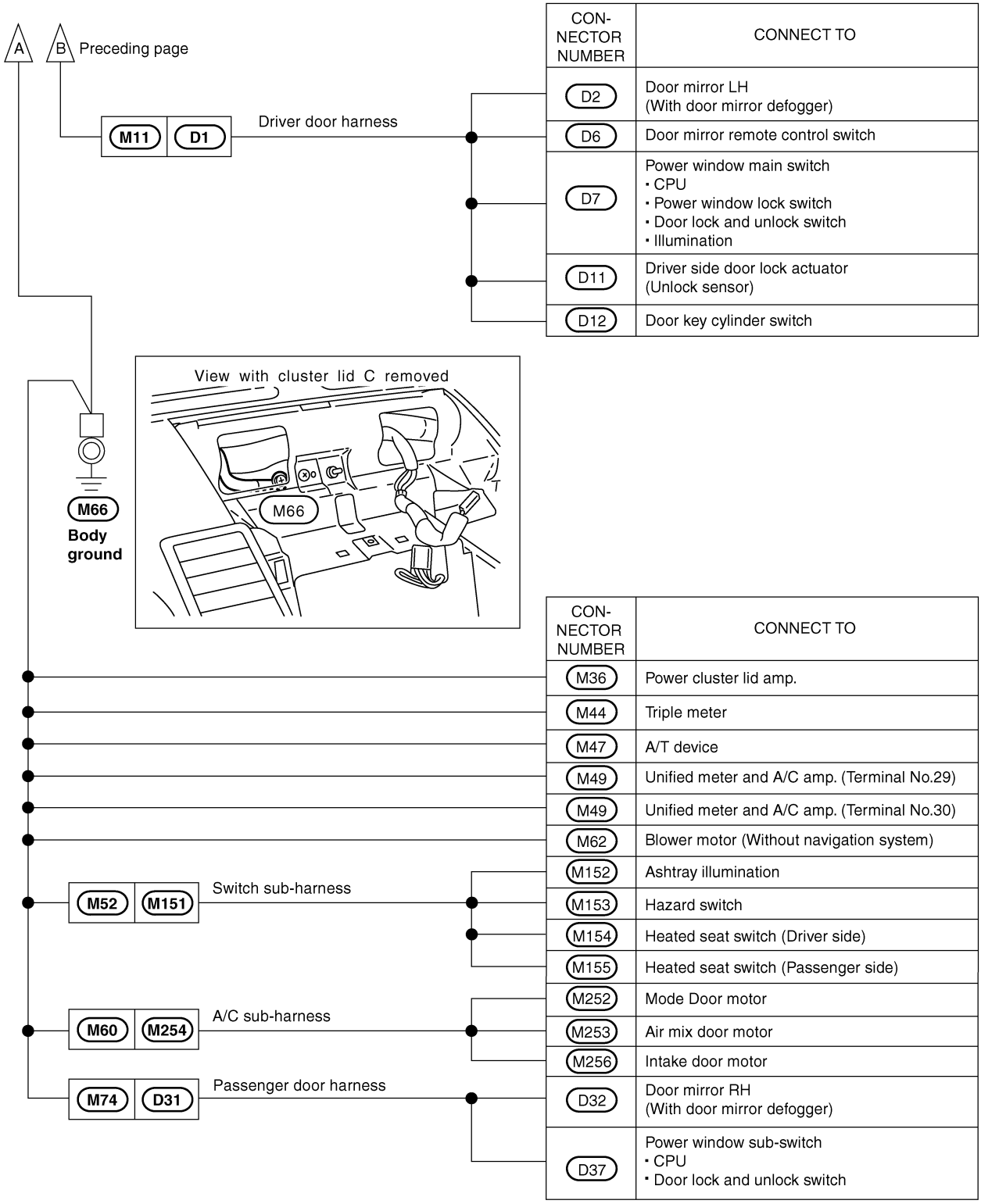

CON-NECTOR NUMBER	CONNECT TO
D2	Door mirror LH (With door mirror defogger)
D6	Door mirror remote control switch
D7	Power window main switch • CPU • Power window lock switch • Door lock and unlock switch • Illumination
D11	Driver side door lock actuator (Unlock sensor)
D12	Door key cylinder switch

CON-NECTOR NUMBER	CONNECT TO
M36	Power cluster lid amp.
M44	Triple meter
M47	A/T device
M49	Unified meter and A/C amp. (Terminal No.29)
M49	Unified meter and A/C amp. (Terminal No.30)
M62	Blower motor (Without navigation system)
M152	Ashtray illumination
M153	Hazard switch
M154	Heated seat switch (Driver side)
M155	Heated seat switch (Passenger side)
M252	Mode Door motor
M253	Air mix door motor
M256	Intake door motor
D32	Door mirror RH (With door mirror defogger)
D37	Power window sub-switch • CPU • Door lock and unlock switch

CKIT0539E

ENGINE ROOM HARNESS

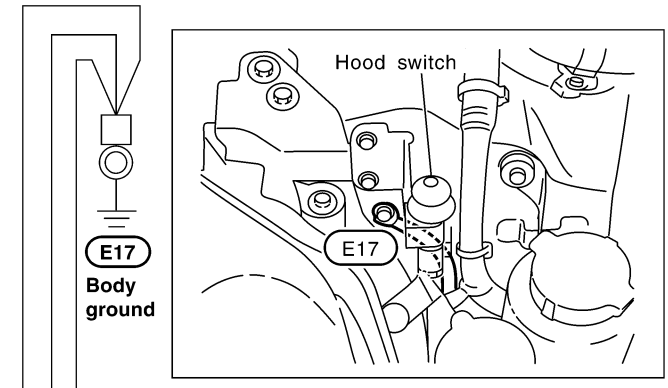

CON-NECTOR NUMBER	CONNECT TO
E8	IPDM E/R (Intelligent power distribution module engine room) (Terminal No.38)
E9	IPDM E/R (Intelligent power distribution module engine room) (Terminal No.50)
E9	IPDM E/R (Intelligent power distribution module engine room) (Terminal No.60)
E15	Daytime light control unit (Terminal No.16)
E24	Front combination lamp RH (Terminal No.1) ・Turn signal ・Parking ・Side marker
E24	Front combination lamp RH (Terminal No.4) ・Headlamp (High)
E24	Front combination lamp RH (Terminal No.8) ・Headlamp (Low)
E25	Front combination lamp RH (Terminal No.3) ・Headlamp (High) ・Headlamp (Low)
E25	Front combination lamp RH (Terminal No.4) ・Turn signal ・Parking ・Side marker
E38	Cooling fan motor-1
E39	Cooling fan motor-2

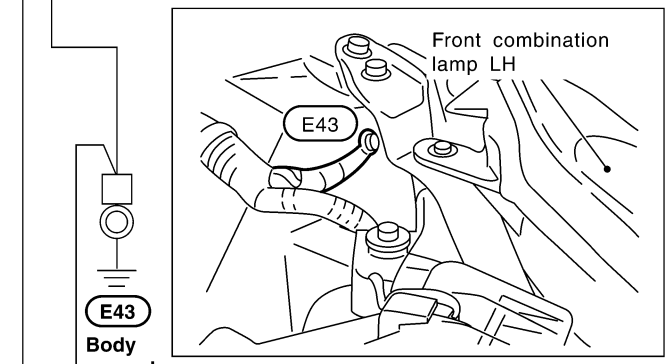

E108 | M15 — Main harness

CON-NECTOR NUMBER	CONNECT TO
M22	Steering angle sensor
E6	IPDM E/R (Intelligent power distribution module engine room) (Terminal No.14)
E14	Daytime light control unit (Terminal No.14)

C D Next page

To engine control earth sub-harness

CKIT0456E

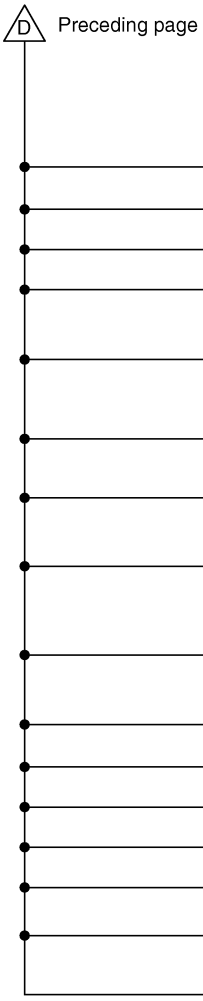

CON-NECTOR NUMBER	CONNECT TO
E23	Hood switch
E30	Washer level sensor
E33	Horn (Low)
E36	Horn (High)
E40	Front combination lamp LH (Terminal No. 1) • Turn signal • Parking • Side marker
E40	Front combination lamp LH (Terminal No. 4) • Headlamp (High) (For U.S.A.)
E40	Front combination lamp LH (Terminal No. 8) • Headlamp (Low)
E41	Front combination lamp LH (Terminal No. 3) • Headlamp (High) (For U.S.A.) • Headlamp (Low) (For U.S.A.)
E41	Front combination lamp LH (Terminal No. 4) • Turn signal • Parking • Side marker
E44	Brake fluid level switch
E51	ABS actuator and electric unit (Terminal No. 16)
E51	ABS actuator and electric unit (Terminal No. 30)
E52	Front wiper motor
E111	Stop lamp switch (With A/T)
E118	VDC/TCS/ABS control unit (Terminal No. 28)
E118	VDC/TCS/ABS control unit (Terminal No. 29)

CKIB0202E

CON-NECTOR NUMBER	CONNECT TO
E37	Shield wire (Crash zone sensor)

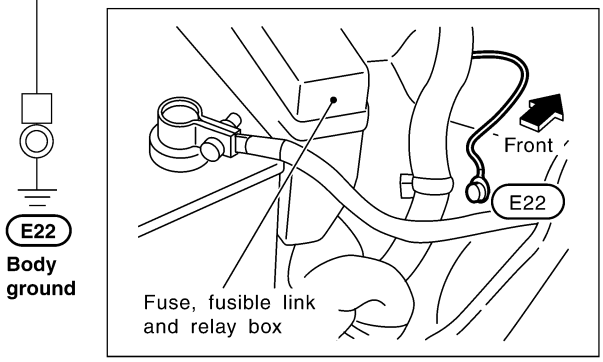

E22
Body ground

CON-NECTOR NUMBER	CONNECT TO
E211	Alternator (E)

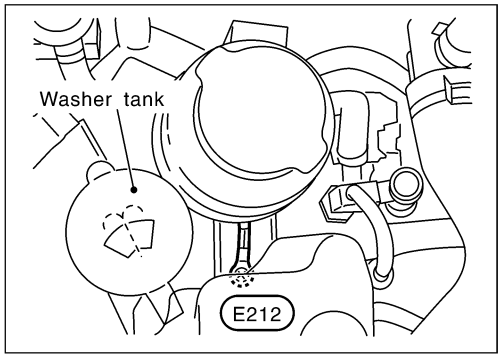

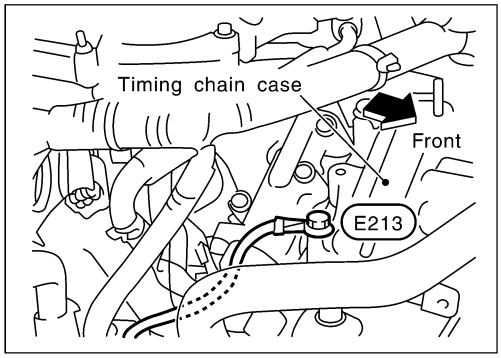

E212
Body ground

E213
Engine ground

CKIT0170E

ENGINE CONTROL HARNESS

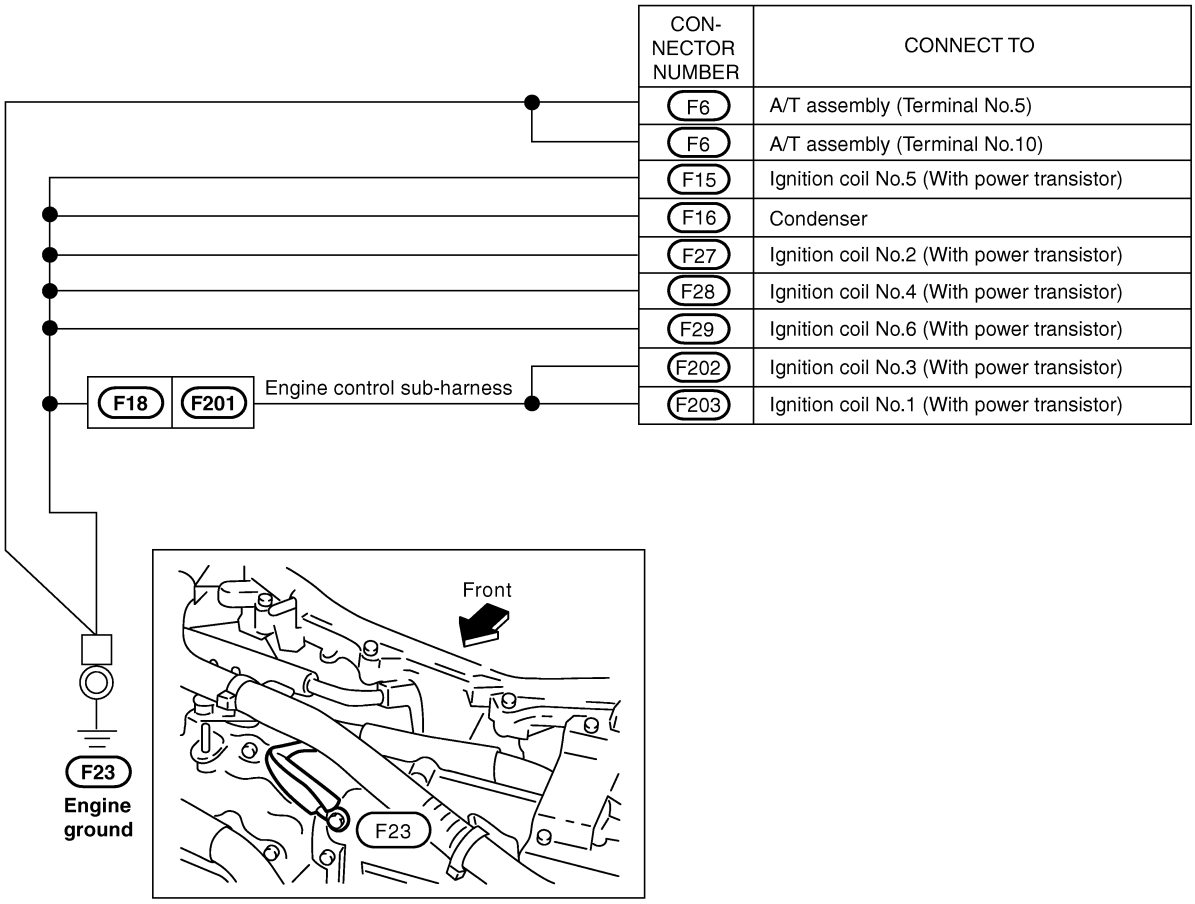

CON-NECTOR NUMBER	CONNECT TO
F6	A/T assembly (Terminal No.5)
F6	A/T assembly (Terminal No.10)
F15	Ignition coil No.5 (With power transistor)
F16	Condenser
F27	Ignition coil No.2 (With power transistor)
F28	Ignition coil No.4 (With power transistor)
F29	Ignition coil No.6 (With power transistor)
F202	Ignition coil No.3 (With power transistor)
F203	Ignition coil No.1 (With power transistor)

CKIB0204E

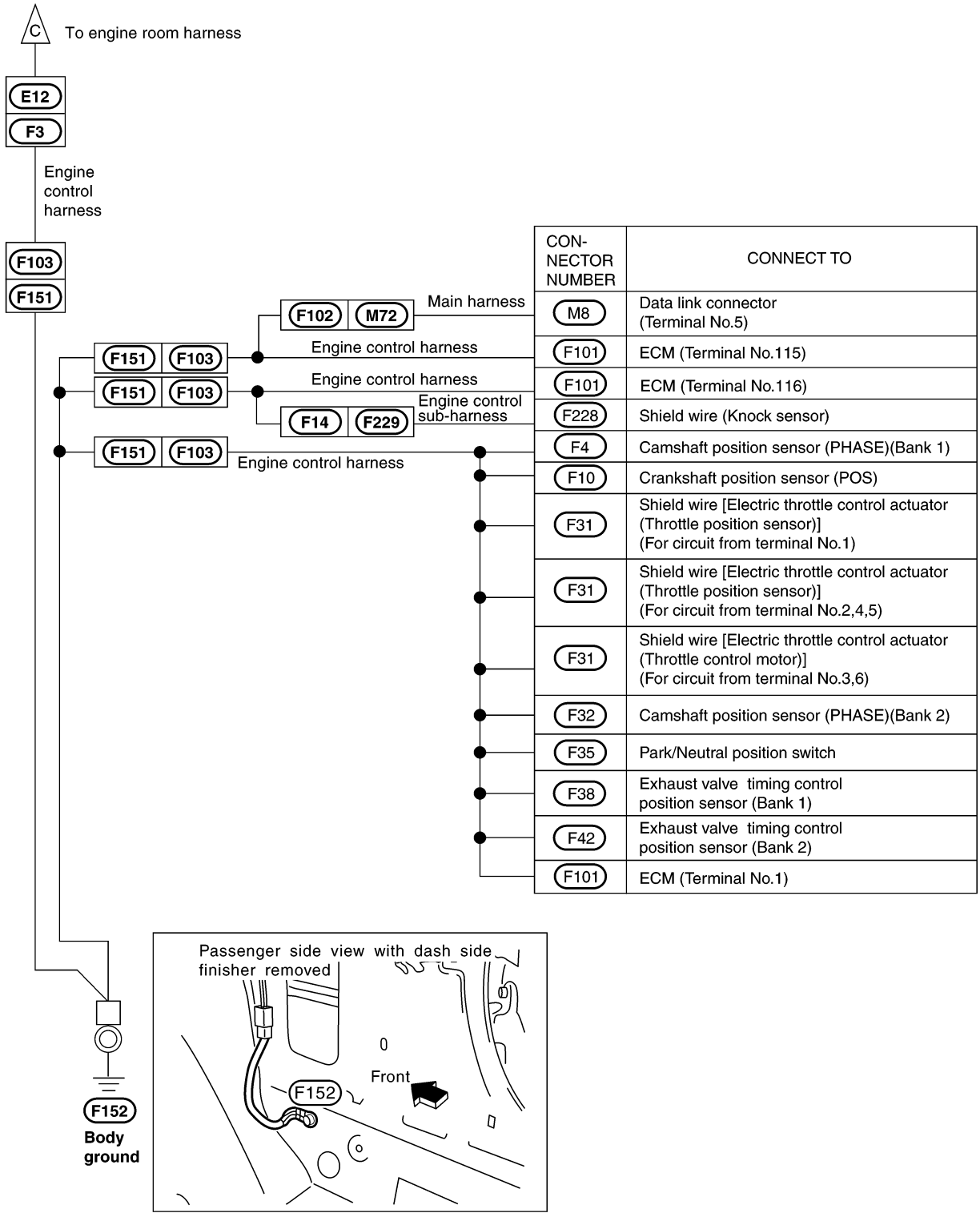

CON-NECTOR NUMBER	CONNECT TO
M8	Data link connector (Terminal No.5)
F101	ECM (Terminal No.115)
F101	ECM (Terminal No.116)
F228	Shield wire (Knock sensor)
F4	Camshaft position sensor (PHASE)(Bank 1)
F10	Crankshaft position sensor (POS)
F31	Shield wire [Electric throttle control actuator (Throttle position sensor)] (For circuit from terminal No.1)
F31	Shield wire [Electric throttle control actuator (Throttle position sensor)] (For circuit from terminal No.2,4,5)
F31	Shield wire [Electric throttle control actuator (Throttle control motor)] (For circuit from terminal No.3,6)
F32	Camshaft position sensor (PHASE)(Bank 2)
F35	Park/Neutral position switch
F38	Exhaust valve timing control position sensor (Bank 1)
F42	Exhaust valve timing control position sensor (Bank 2)
F101	ECM (Terminal No.1)

CKIT0646E

BODY HARNESS
Coupe Models

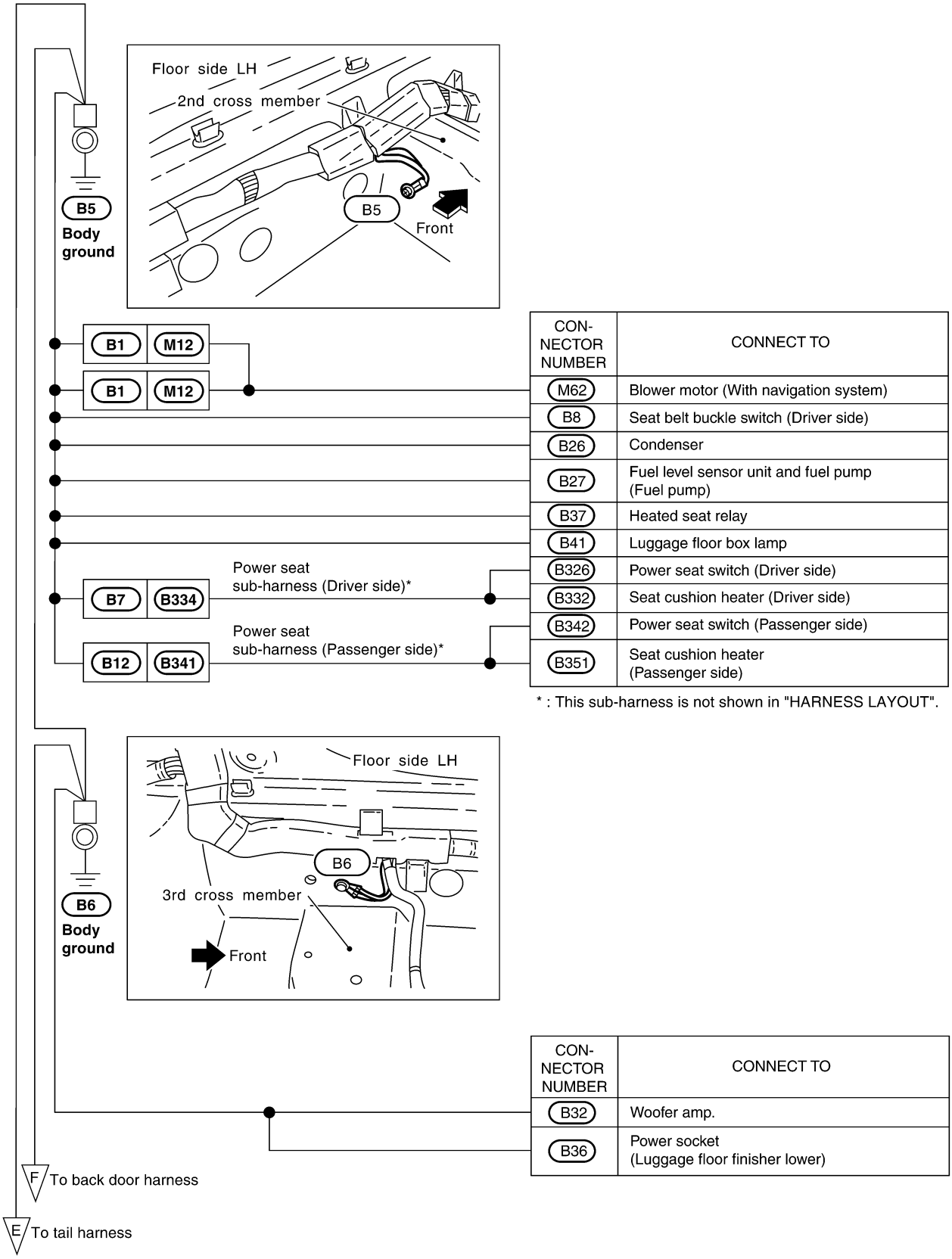

CON-NECTOR NUMBER	CONNECT TO
M62	Blower motor (With navigation system)
B8	Seat belt buckle switch (Driver side)
B26	Condenser
B27	Fuel level sensor unit and fuel pump (Fuel pump)
B37	Heated seat relay
B41	Luggage floor box lamp
B326	Power seat switch (Driver side)
B332	Seat cushion heater (Driver side)
B342	Power seat switch (Passenger side)
B351	Seat cushion heater (Passenger side)

* : This sub-harness is not shown in "HARNESS LAYOUT".

CON-NECTOR NUMBER	CONNECT TO
B32	Woofer amp.
B36	Power socket (Luggage floor finisher lower)

CKIT0459E

CON-NECTOR NUMBER	CONNECT TO
B15	Shield wire [LH side air bag (Satellite) sensor]

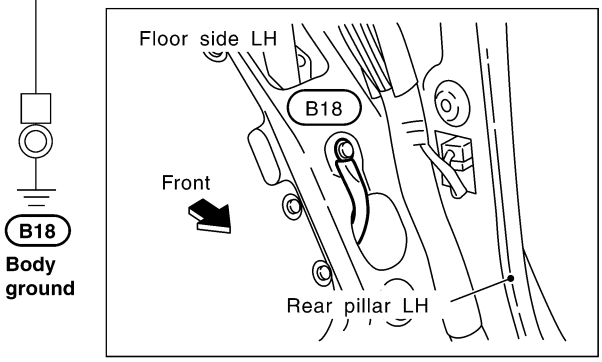

CON-NECTOR NUMBER	CONNECT TO
B21	Shield wire [RH side air bag (Satellite) sensor]

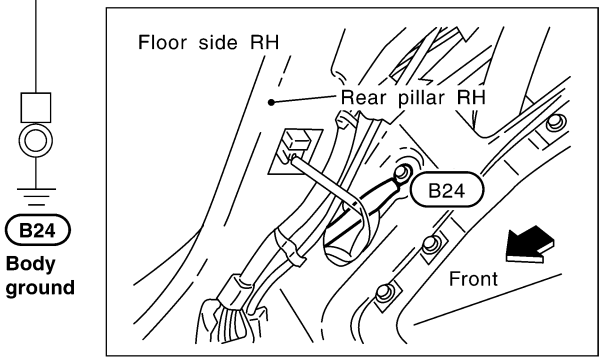

CKIT0174E

Roadster Models

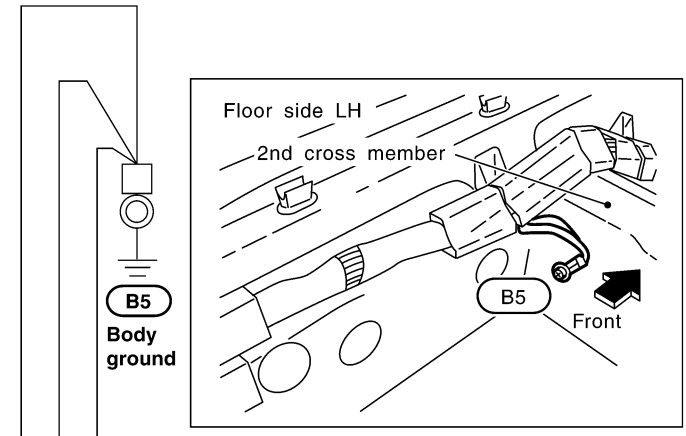

CON-NECTOR NUMBER	CONNECT TO
M62	Blower motor (With navigation system)
B8	Seat belt buckle switch (Driver side)
B26	Condenser
B27	Fuel level sensor unit and fuel pump (Fuel pump)
B37	Heated seat relay
B41	Luggage floor box lamp
B64	Storage lid switch LH (Close)
B65	Storage lid unlock actuator LH
B69	Storage lid switch RH (Close)
B70	Storage lid unlock actuator RH
B212	Soft top switch assembly 1 ・Roof full open switch ・Body interference prevention switch
B213	Soft top switch assembly 2 ・Roof full close switch ・Roll bar interference prevention switch
B214	Plate rail RR ・5th bow full open switch ・5th bow full close switch
B326	Power seat switch (Driver side)
B332	Seat cushion heater (Driver side)

* : This sub-harness is not shown in "HARNESS LAYOUT".

CKIT0460E

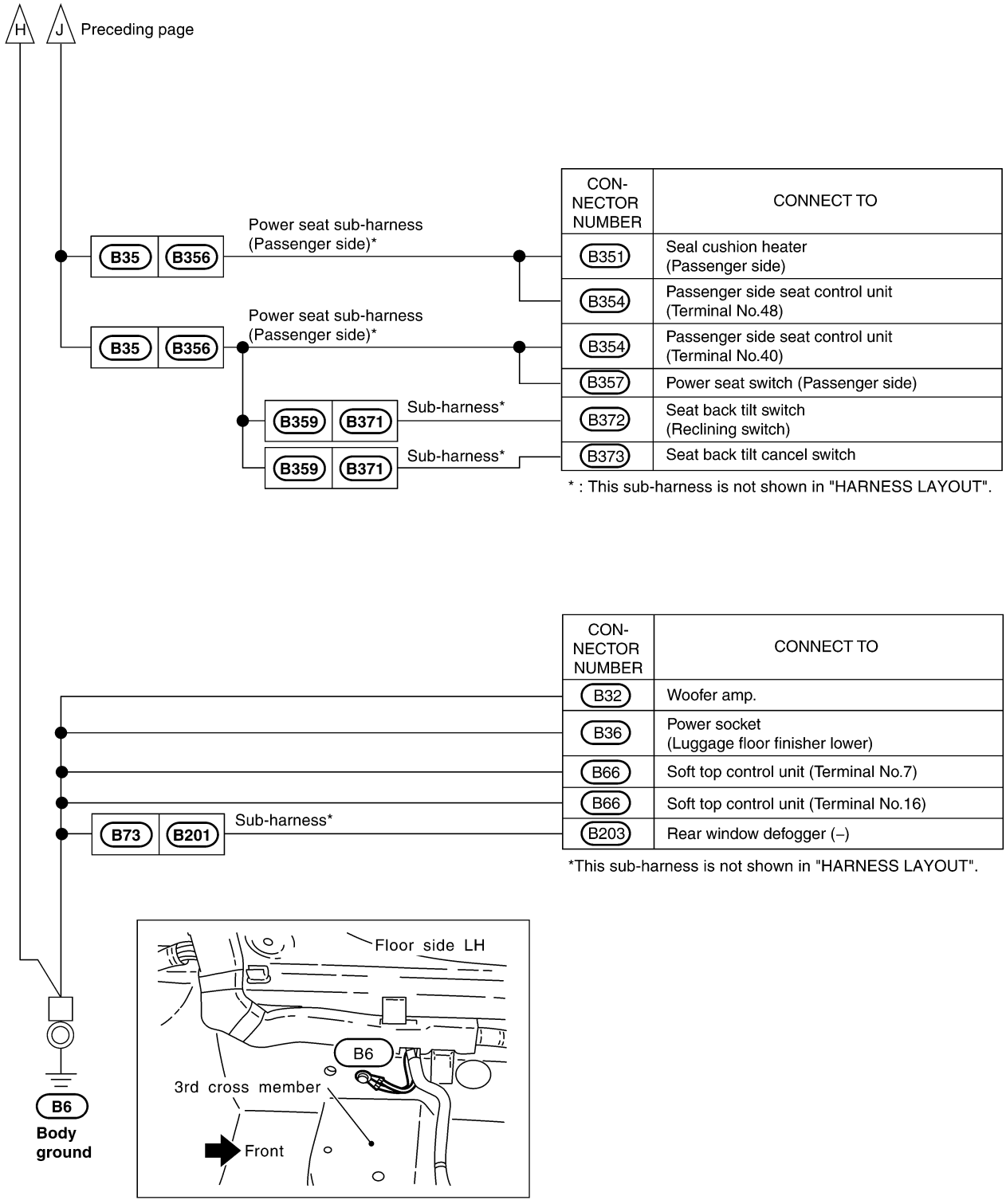
H
J
Preceding page
B35
B356
Power seat sub-harness
(Passenger side)*
B35
B356
Power seat sub-harness
(Passenger side)*
B359
B371
Sub-harness*
B359
B371
Sub-harness*
CON-NECTOR NUMBER
CONNECT TO
B351
Seal cushion heater
(Passenger side)
B354
Passenger side seat control unit
(Terminal No.48)
B354
Passenger side seat control unit
(Terminal No.40)
B357
Power seat switch (Passenger side)
B372
Seat back tilt switch
(Reclining switch)
B373
Seat back tilt cancel switch
* : This sub-harness is not shown in "HARNESS LAYOUT".
CON-NECTOR NUMBER
CONNECT TO
B32
Woofer amp.
B36
Power socket
(Luggage floor finisher lower)
B66
Soft top control unit (Terminal No.7)
B66
Soft top control unit (Terminal No.16)
B73
B201
Sub-harness*
B203
Rear window defogger (–)
*This sub-harness is not shown in "HARNESS LAYOUT".
Floor side LH
B6
3rd cross member
Front
B6
Body
ground
CKIT0470E

CON-NECTOR NUMBER	CONNECT TO
B15	Shield wire [LH side air bag (Satellite) sensor]

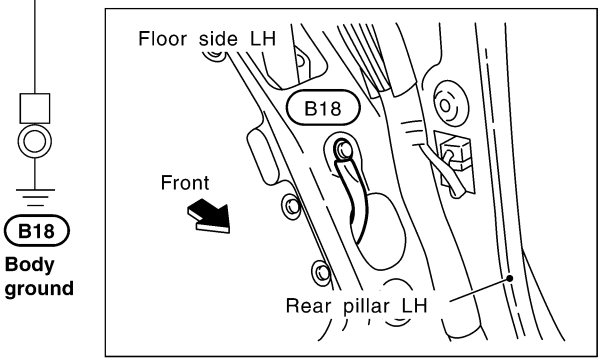

CON-NECTOR NUMBER	CONNECT TO
B21	Shield wire [RH side air bag (Satellite) sensor]

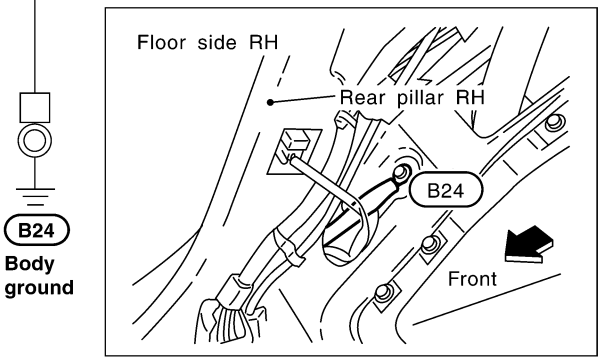

CKIT0174E

BODY NO. 2 HARNESS

CON-NECTOR NUMBER	CONNECT TO
B104	NAVI control unit (Terminal No.1)
B104	NAVI control unit (Terminal No. 4)

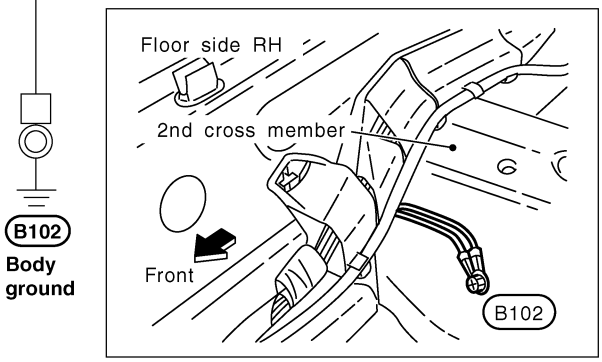

CON-NECTOR NUMBER	CONNECT TO
B104	NAVI control unit (Terminal No.23)

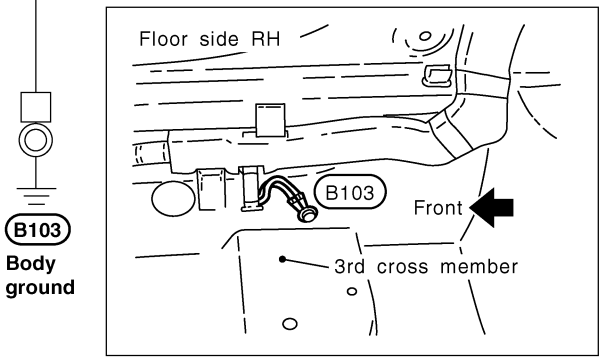

CKIT0540E

TAIL HARNESS
Coupe Models

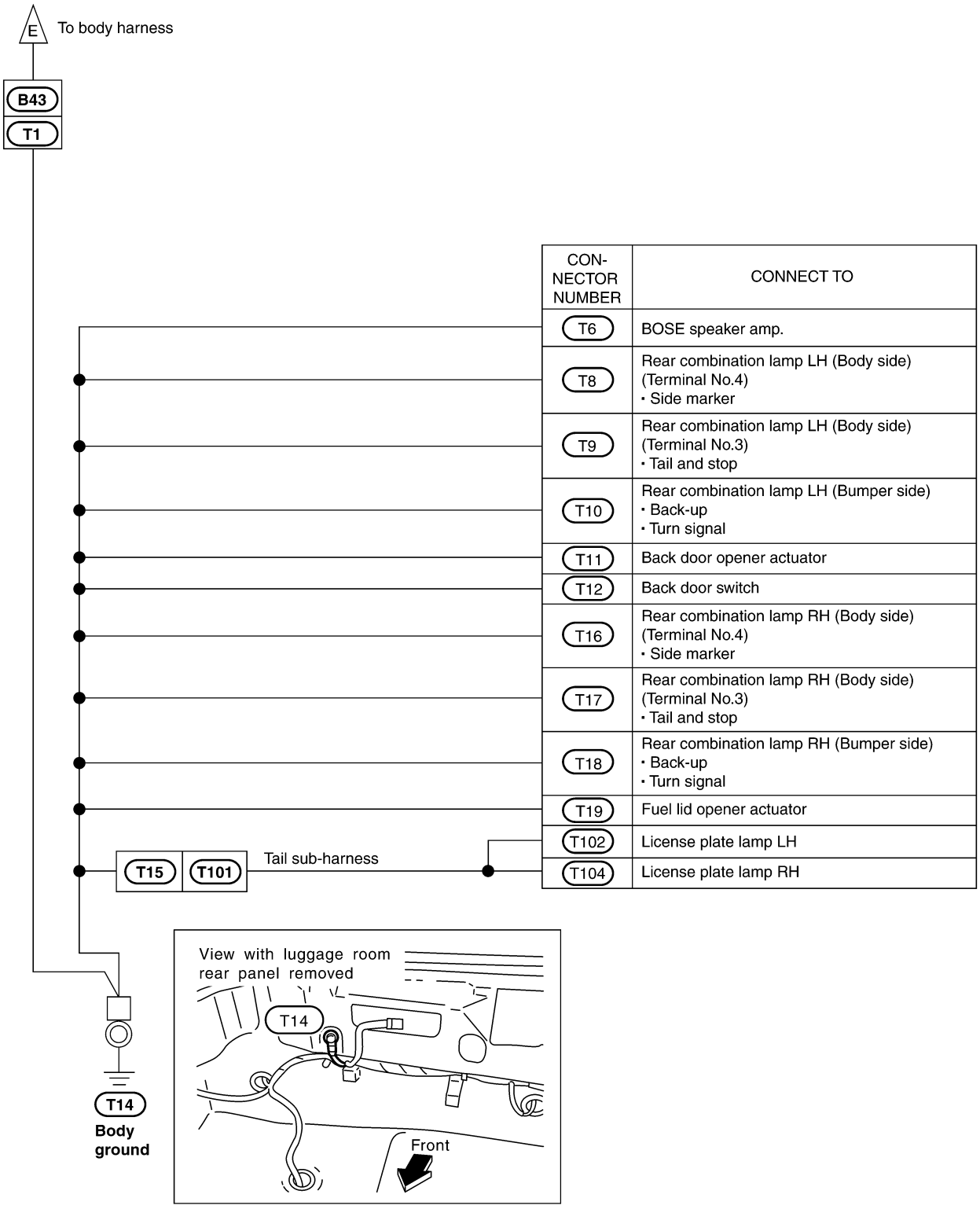

CON-NECTOR NUMBER	CONNECT TO
T6	BOSE speaker amp.
T8	Rear combination lamp LH (Body side) (Terminal No.4) ・Side marker
T9	Rear combination lamp LH (Body side) (Terminal No.3) ・Tail and stop
T10	Rear combination lamp LH (Bumper side) ・Back-up ・Turn signal
T11	Back door opener actuator
T12	Back door switch
T16	Rear combination lamp RH (Body side) (Terminal No.4) ・Side marker
T17	Rear combination lamp RH (Body side) (Terminal No.3) ・Tail and stop
T18	Rear combination lamp RH (Bumper side) ・Back-up ・Turn signal
T19	Fuel lid opener actuator
T102	License plate lamp LH
T104	License plate lamp RH

CKIT0462E

Roadster Models

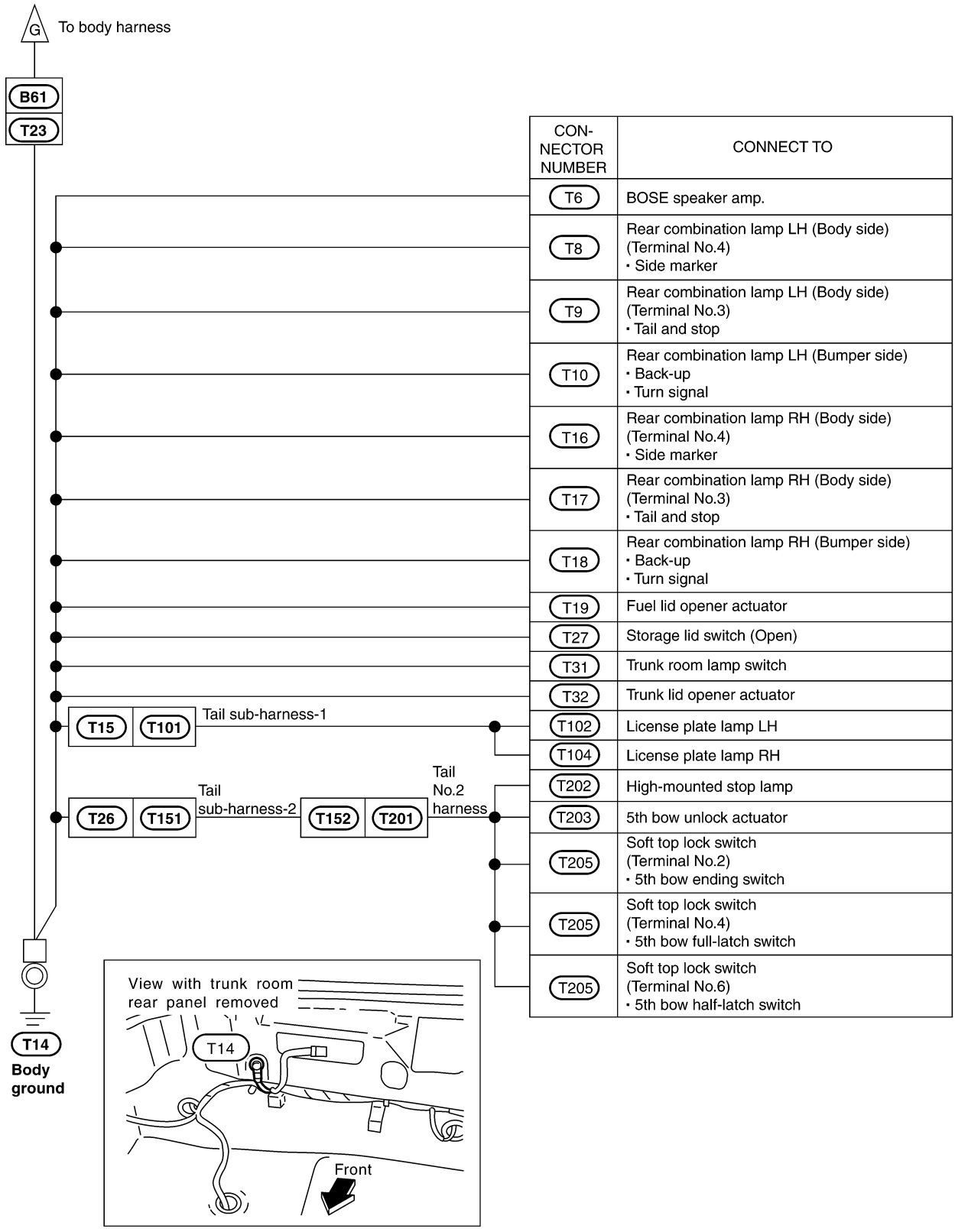

CON-NECTOR NUMBER	CONNECT TO
T6	BOSE speaker amp.
T8	Rear combination lamp LH (Body side) (Terminal No.4) ・Side marker
T9	Rear combination lamp LH (Body side) (Terminal No.3) ・Tail and stop
T10	Rear combination lamp LH (Bumper side) ・Back-up ・Turn signal
T16	Rear combination lamp RH (Body side) (Terminal No.4) ・Side marker
T17	Rear combination lamp RH (Body side) (Terminal No.3) ・Tail and stop
T18	Rear combination lamp RH (Bumper side) ・Back-up ・Turn signal
T19	Fuel lid opener actuator
T27	Storage lid switch (Open)
T31	Trunk room lamp switch
T32	Trunk lid opener actuator
T102	License plate lamp LH
T104	License plate lamp RH
T202	High-mounted stop lamp
T203	5th bow unlock actuator
T205	Soft top lock switch (Terminal No.2) ・5th bow ending switch
T205	Soft top lock switch (Terminal No.4) ・5th bow full-latch switch
T205	Soft top lock switch (Terminal No.6) ・5th bow half-latch switch

CKIT0471E

BACK DOOR HARNESS

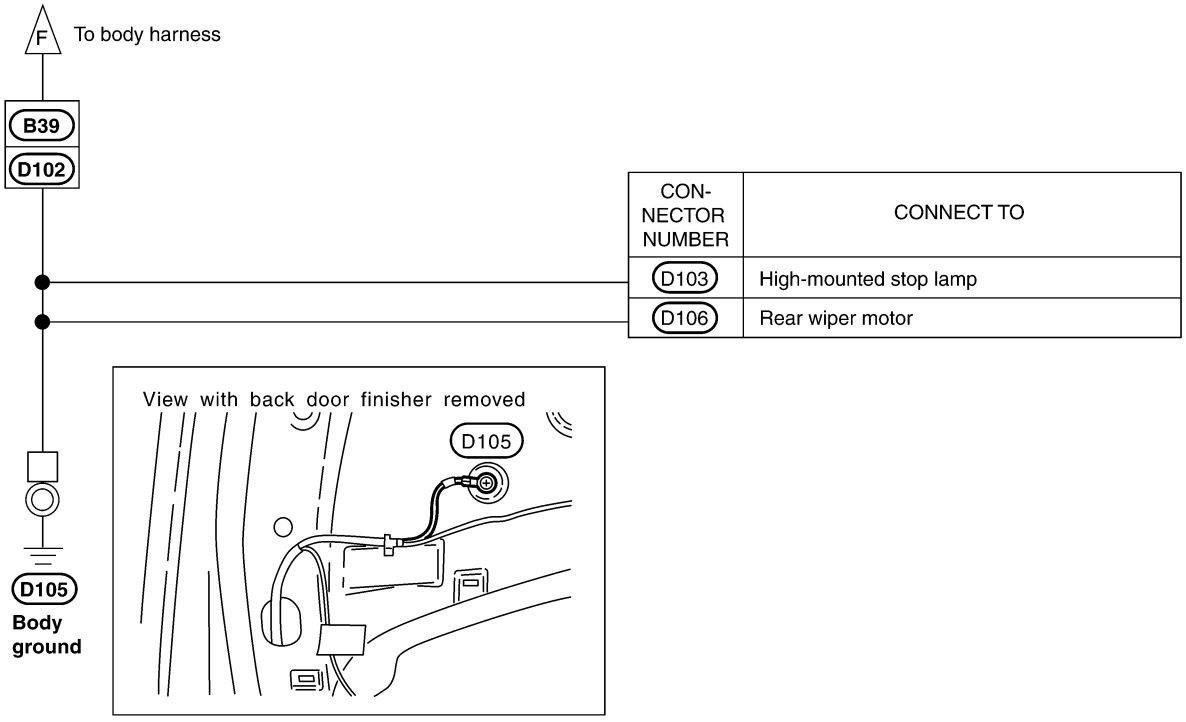

CON-NECTOR NUMBER	CONNECT TO
D103	High-mounted stop lamp
D106	Rear wiper motor

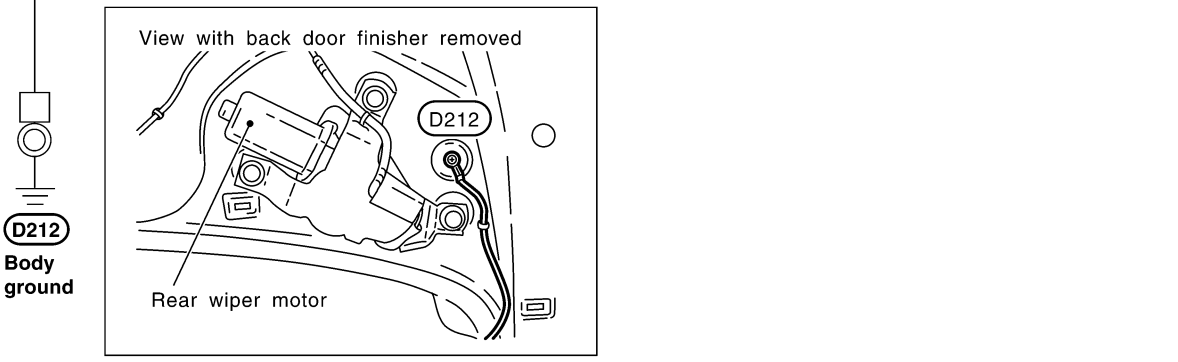

CON-NECTOR NUMBER	CONNECT TO
D211	Rear window defogger (-)

CKIT0464E

HARNESS

PFP:00011

Harness Layout

AKS0012Q

HOW TO READ HARNESS LAYOUT

The following Harness Layouts use a map style grid to help locate connectors on the figures:

- Main Harness
- Engine Room Harness (Engine Compartment)
- Engine Control Harness (Engine Compartment)
- Body Harness
- Tail Harness

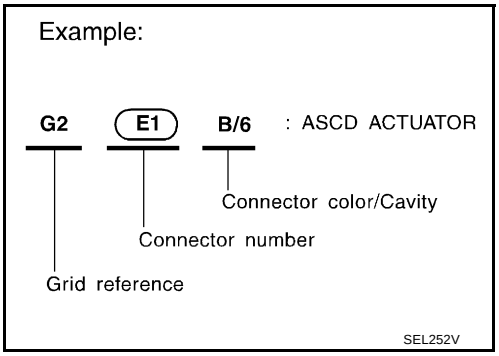

To Use the Grid Reference

1. Find the desired connector number on the connector list.
2. Find the grid reference.
3. On the figure, find the crossing of the grid reference letter column and number row.
4. Find the connector number in the crossing zone.
5. Follow the line (if used) to the connector.

CONNECTOR SYMBOL

Main symbols of connector (in Harness Layout) are indicated in the below.

Connector type	Water proof type		Standard type	
	Male	Female	Male	Female
• Cavity: Less than 4 • Relay connector				
• Cavity: From 5 to 8				
• Cavity: More than 9				
• Ground terminal etc.	—			

CKIT0108E

OUTLINE

Coupe Models

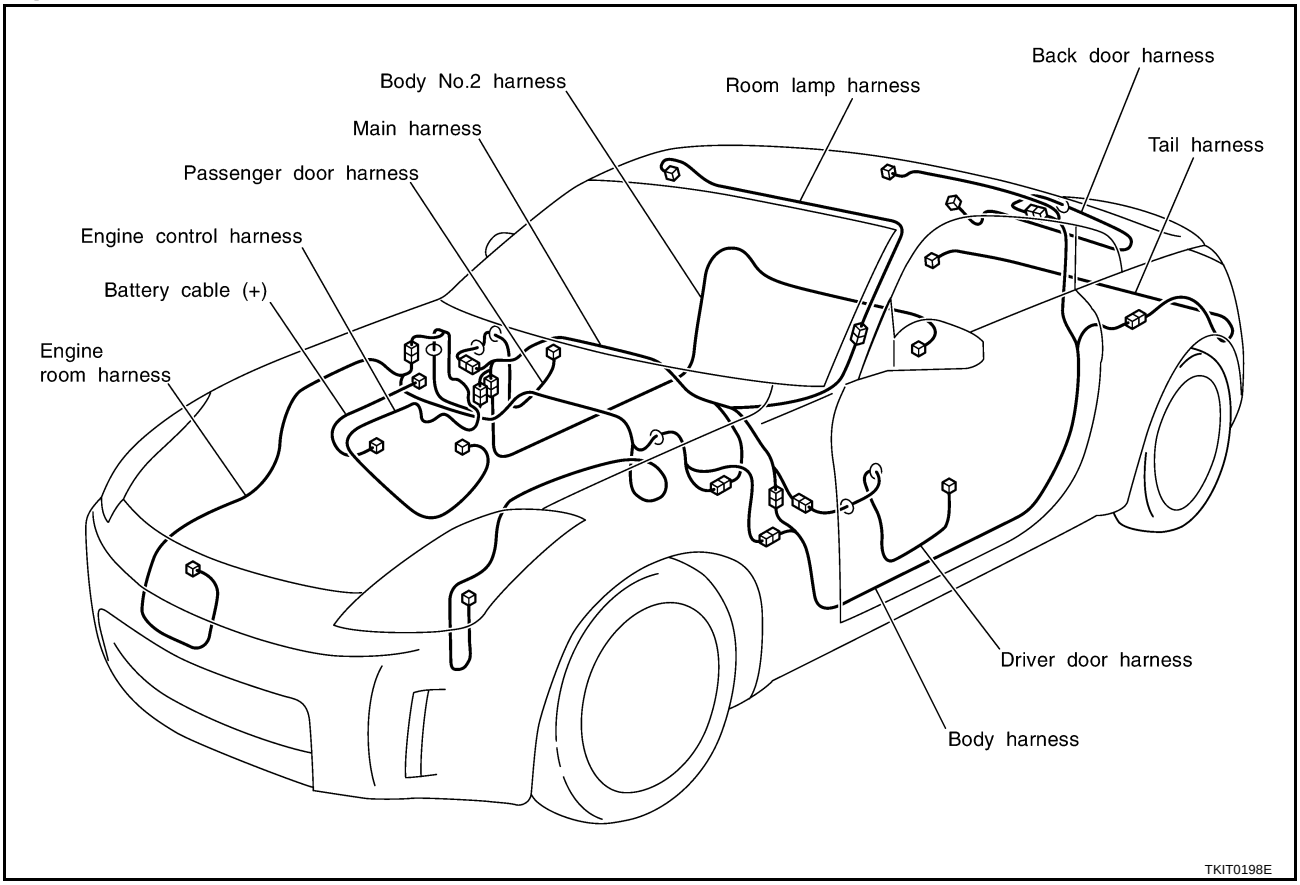

Roadster Models

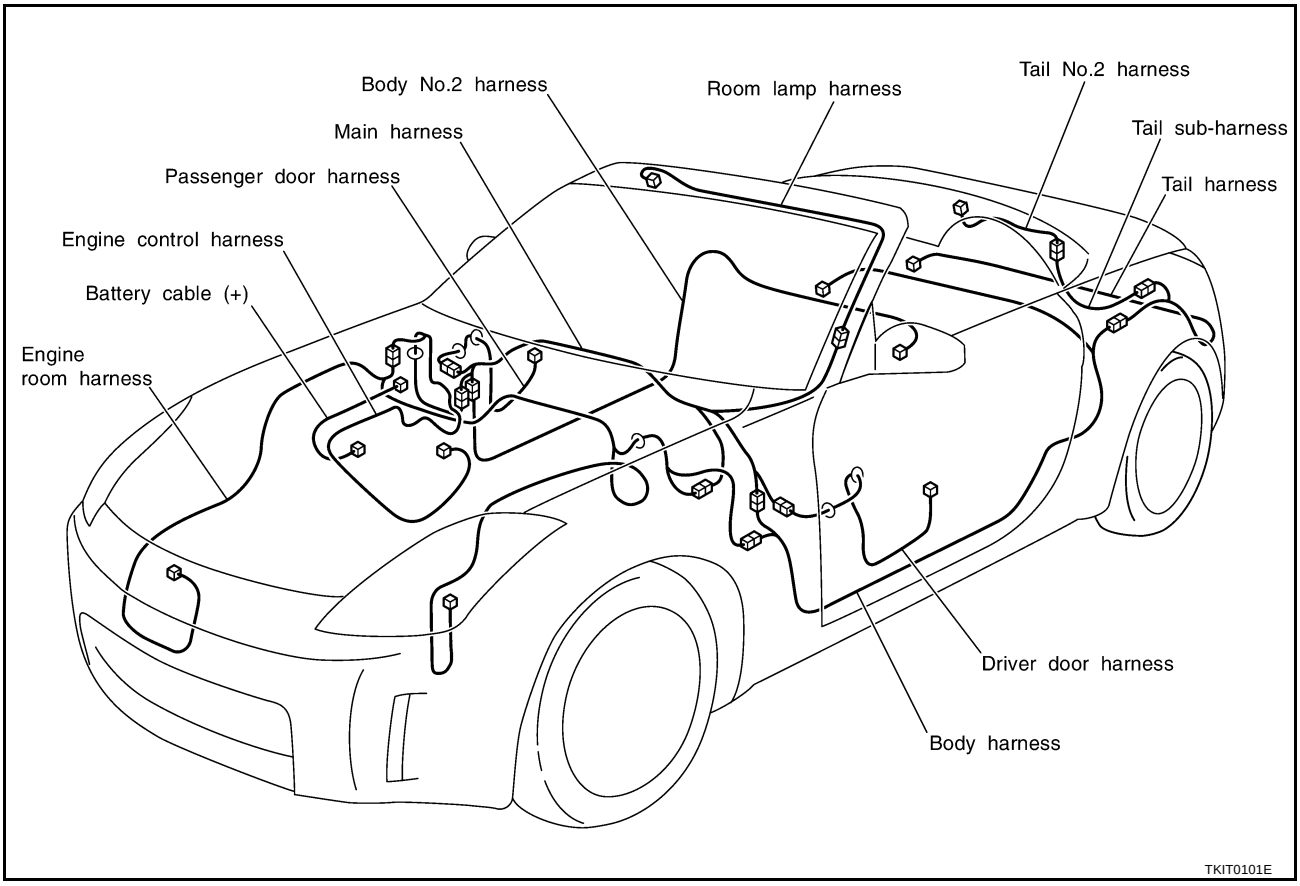

MAIN HARNESS

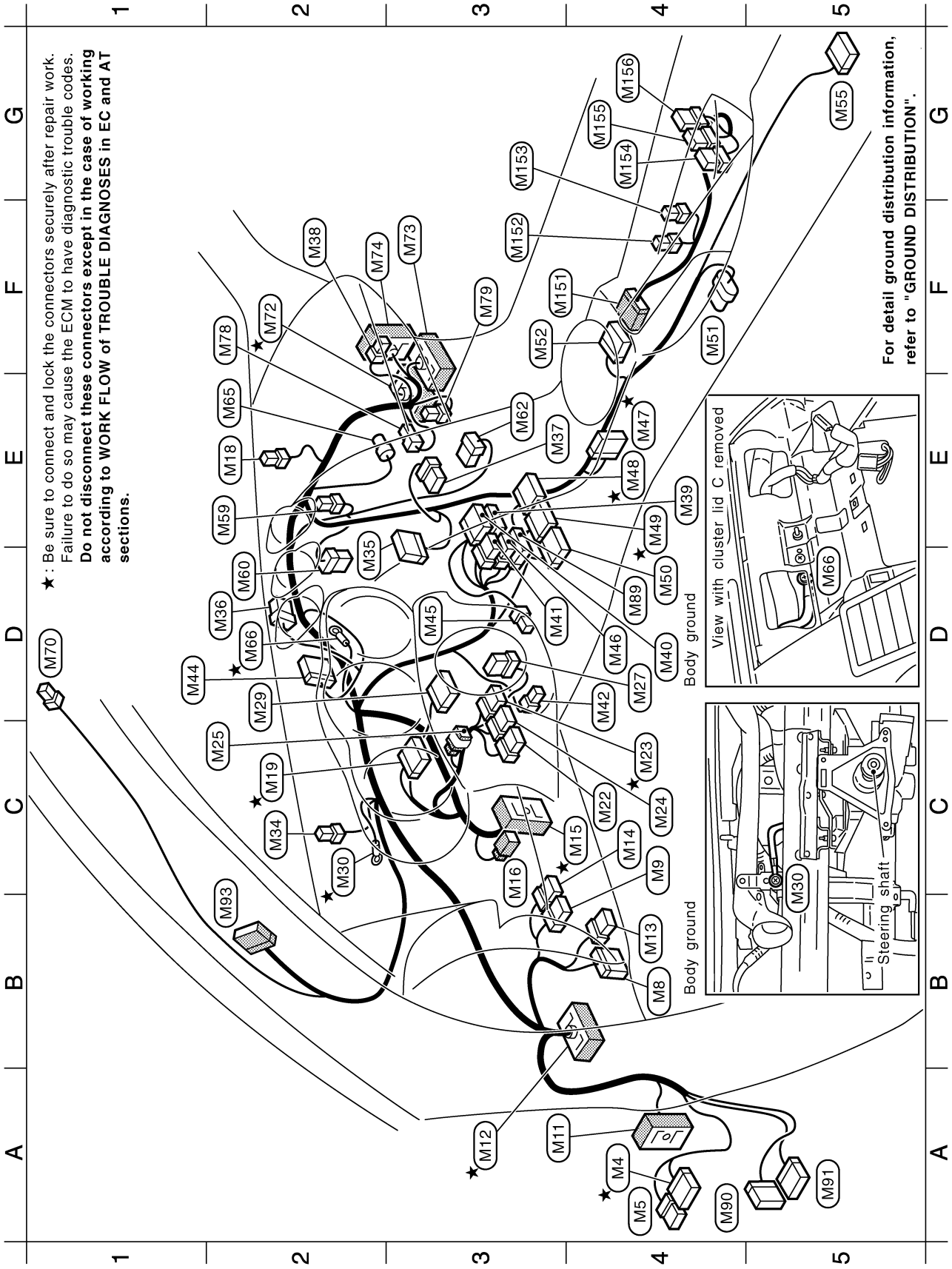

A4 ★	M4	W/16	:	Fuse block (J/B)
A4	M5	W/8	:	Fuse block (J/B)
B4	M8	W/16	:	Data link connector
C4	M9	GY/6	:	VDC off switch (With VDC system)
		GY/6	:	TCS off switch (With TCS without VDC system)
A3	M11	SMJ	:	To D1
A3 ★	M12	SMJ	:	To B1
B4	M13	GY/6	:	Fuel lid opener switch
C4	M14	W/6	:	Soft top switch (For Roadster models)
C4 ★	M15	SMJ	:	To E108
C3	M16	Y/4	:	To E109
E2	M18	B/2	:	Sunload sensor
C2 ★	M19	W/24	:	Combination meter
C4	M22	W/8	:	Steering angle sensor (For VDC system)
C4 ★	M23	GY/8	:	Combination switch (Spiral cable)
C4	M24	Y/6	:	Combination switch (Spiral cable)
C2	M25	BR/2	:	Key switch
D4	M27	W/8	:	NATS antenna amp.
D2	M29	W/16	:	Combination switch
C2 ★	M30	—	:	Body ground
C2	M34	BR/2	:	Security indicator lamp
D2	M35	GY/24	:	Display unit (With navigation system)
D2	M36	W/8	:	Power cluster lid amp. (With navigation system)
E3	M37	W/8	:	NAVI switch (With navigation system)
F2	M38	B/2	:	Power socket
E4	M39	W/16	:	Audio unit (With navigation system or with BOSE system)
D4	M40	W/10	:	Audio unit
D3	M41	W/6	:	Audio unit
D4	M42	W/2	:	In-vehicle sensor
D1	M44	W12	:	Triple meter
D3	M45	BR/2	:	Antenna amp. (Via sub-harness)
D4	M46	BR/8	:	Audio unit (With navigation system)
E4 ★	M47	W/10	:	A/T device (For A/T)
E4 ★	M48	GY/20	:	Unified meter and A/C amp.
E4 ★	M49	GY/16	:	Unified meter and A/C amp.
D4	M50	W/24	:	Unified meter and A/C amp.
F4	M51	B/6	:	Yaw rate / side G sensor (For VDC system)
F3	M52	W/12	:	To M151
G5	M55	Y/28	:	Air bag diagnosis sensor unit
E2	M59	L/4	:	Fuel lid opener relay
D2	M60	W/6	:	To M254
E3	M62	W/6	:	Blower motor
E2	M65	Y/4	:	Front passenger air bag module
D2 ★	M66	—	:	Body ground
D1	M70	W/4	:	To R51
F2 ★	M72	SMJ	:	To F102
F3	M73	SMJ	:	To B101 (With navigation system)
F2	M74	SMJ	:	To D31
F2	M78	W/4	:	Remote keyless entry receiver
F3	M79	W/2	:	Tire pressure warning check connector
D4	M89	W/12	:	Audio unit (With BOSE system)
A4	M90	W/40	:	BCM (Body control module)
A5	M91	B/15	:	BCM (Body control module)
B2	M93	W/12	:	To R2

Switch sub-harness

F3	M151	W/12	:	To M52
F3	M152	W/2	:	Ashtray illumination
G3	M153	W/4	:	Hazard switch
G4	M154	W/6	:	Heated seat switch (Driver side) (With heated seat)
G4	M155	BR/6	:	Heated seat switch (Passenger side) (With heated seat)
G4	M156	W/6	:	Not used

A/C sub-harness

	M251	W/3	:	Not used
	M252	W/3	:	Mode door motor
	M253	W/3	:	Air mix door motor
	M254	W/6	:	To M60
	M255	W/4	:	Intake sensor
	M256	W/3	:	Intake door motor

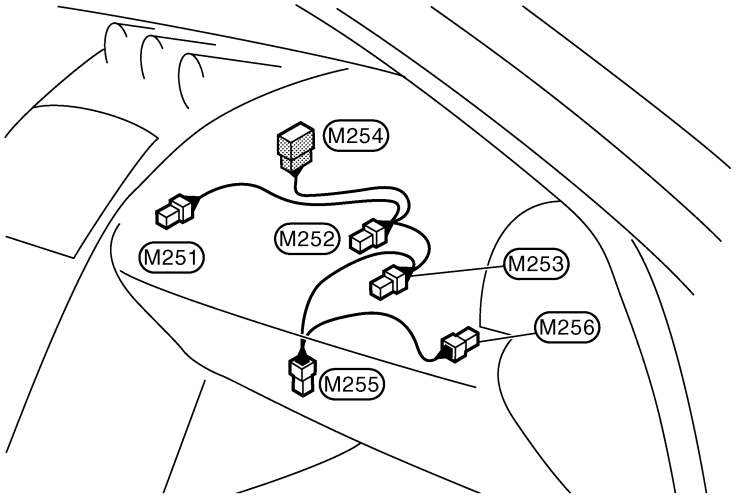

★: Be sure to connect and lock the connectors securely after repair work. Failure to do so may cause the ECM to have diagnostic trouble codes. **Do not disconnect these connectors except in the case of working according to WORK FLOW of TROUBLE DIAGNOSES in EC and AT sections.**

TKIT0288E

ENGINE ROOM HARNESS

Engine Compartment

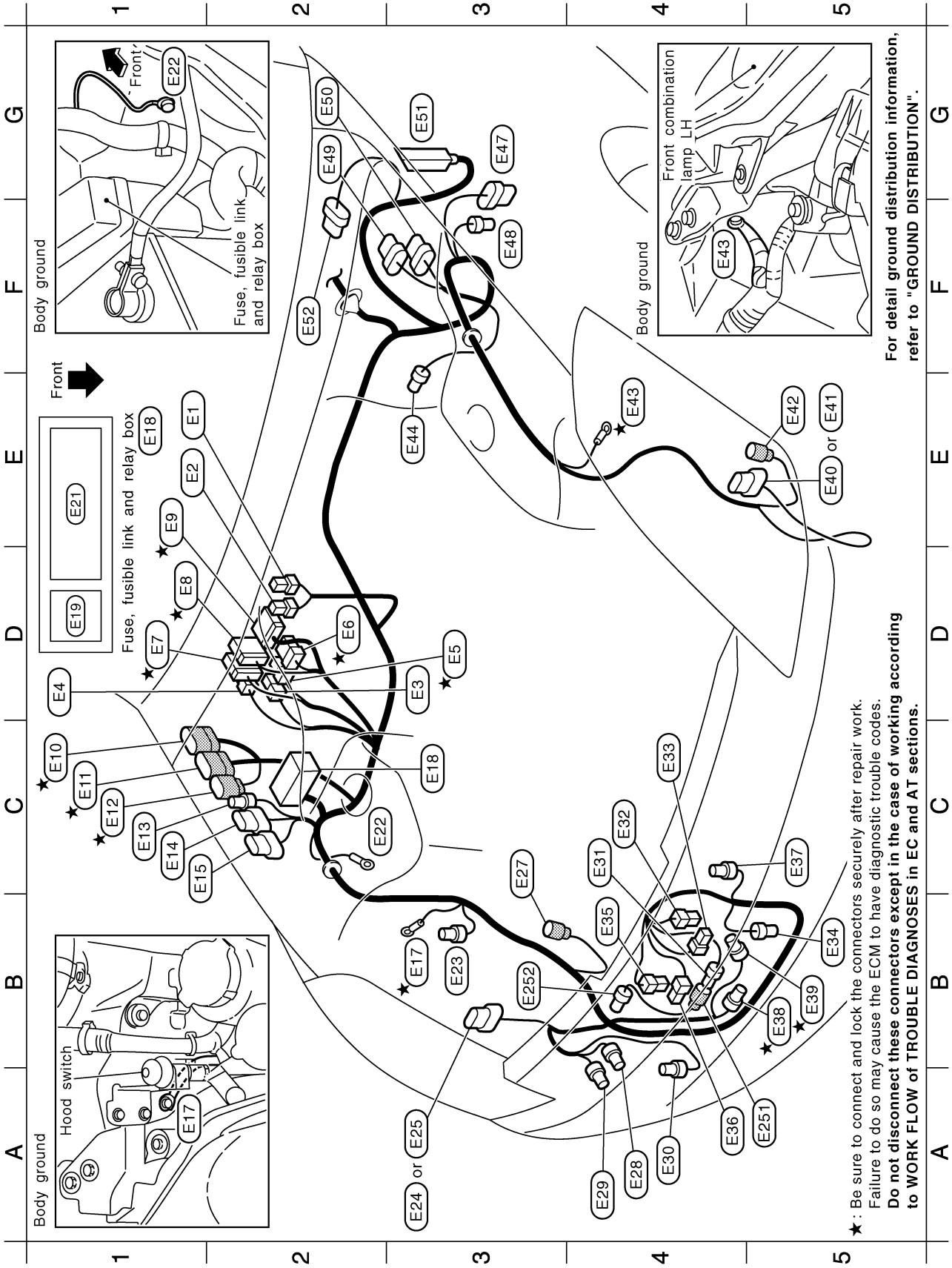

E1	E1	B/2	:	Fusible link holder
E1	E2	GY/2	:	Fusible link holder
D3	E3	B/2	:	IPDM E/R (Intelligent power distribution module engine room)
D1	E4	W/4	:	IPDM E/R (Intelligent power distribution module engine room)
D3 ★	E5	B/4	:	IPDM E/R (Intelligent power distribution module engine room)
D2 ★	E6	W/6	:	IPDM E/R (Intelligent power distribution module engine room)
D1 ★	E7	GY/16	:	IPDM E/R (Intelligent power distribution module engine room)
D1 ★	E8	W/12	:	IPDM E/R (Intelligent power distribution module engine room)
E1 ★	E9	W/16	:	IPDM E/R (Intelligent power distribution module engine room)
C1 ★	E10	GY/9	:	To F1
C1 ★	E11	GY/10	:	To F2
C1 ★	E12	GY/8	:	To F3
C1	E13	GY/4	:	Daytime light control unit (For Canada)
C1	E14	GY/6	:	Daytime light control unit (For Canada)
C1	E15	GY/8	:	Daytime light control unit (For Canada)
B3 ★	E17	—	:	Body ground
C3	E18	—	:	Fuse,fusible link and relay box
D1	E19	L/4	:	Back-up lamp relay (With A/T)
E1	E21	—	:	Fuse and fusible link block
C2	E22	—	:	Body ground
B3	E23	GY/2	:	Hood switch
A3	E24	GY/8	:	Front combination lamp RH (With xenon headlamp)
A3	E25	GY/6	:	Front combination lamp RH (Without xenon headlamp)
C3	E27	GY/2	:	Front wheel sensor RH
A4	E28	GY/2	:	Rear washer motor
A4	E29	GY/2	:	Front washer motor
A4	E30	BR/2	:	Washer level sensor
C4	E31	B/3	:	To E251
C4	E32	B/1	:	Horn (Low)
C4	E33	B/1	:	Horn (Low)
B5	E34	B/2	:	Ambient sensor
B4	E35	B/1	:	Horn (High)
A4	E36	B/1	:	Horn (High)
C5	E37	Y/2	:	Crash zone sensor
B5 ★	E38	GY/4	:	Cooling fan motor-1 (Via sub-harness)
B5 ★	E39	GY/4	:	Cooling fan motor-2 (Via sub-harness)
E5	E40	GY/8	:	Front combination lamp LH (With xenon headlamp)
E5	E41	GY/6	:	Front combination lamp LH (Without xenon headlamp)
E5	E42	B/2	:	Front wheel sensor LH
E4 ★	E43	—	:	Body ground
E3	E44	GY/2	:	Brake fluid level switch
G3	E47	B/8	:	VDC relay box (With VDC system)
F3	E48	B/2	:	VDC relay box (With VDC system)
G2	E49	GY/8	:	VDC relay box (With VDC system)
G2	E50	GY/8	:	VDC relay box (With VDC system)
G3	E51	SMJ	:	ABS actuator and electric unit (Without VDC system)
F2	E52	GY/5	:	Front wiper motor

Sub-harness

A5	E251	B/3	:	To E31
B3	E252	B/3	:	Refrigerant pressure sensor

★ : Be sure to connect and lock the connectors securely after repair work. Failure to do so may cause the ECM to have diagnostic trouble codes. **Do not disconnect these connectors except in the case of working according to WORK FLOW of TROUBLE DIAGNOSES in EC and AT sections.**

TKIT0290E

Passenger Compartment

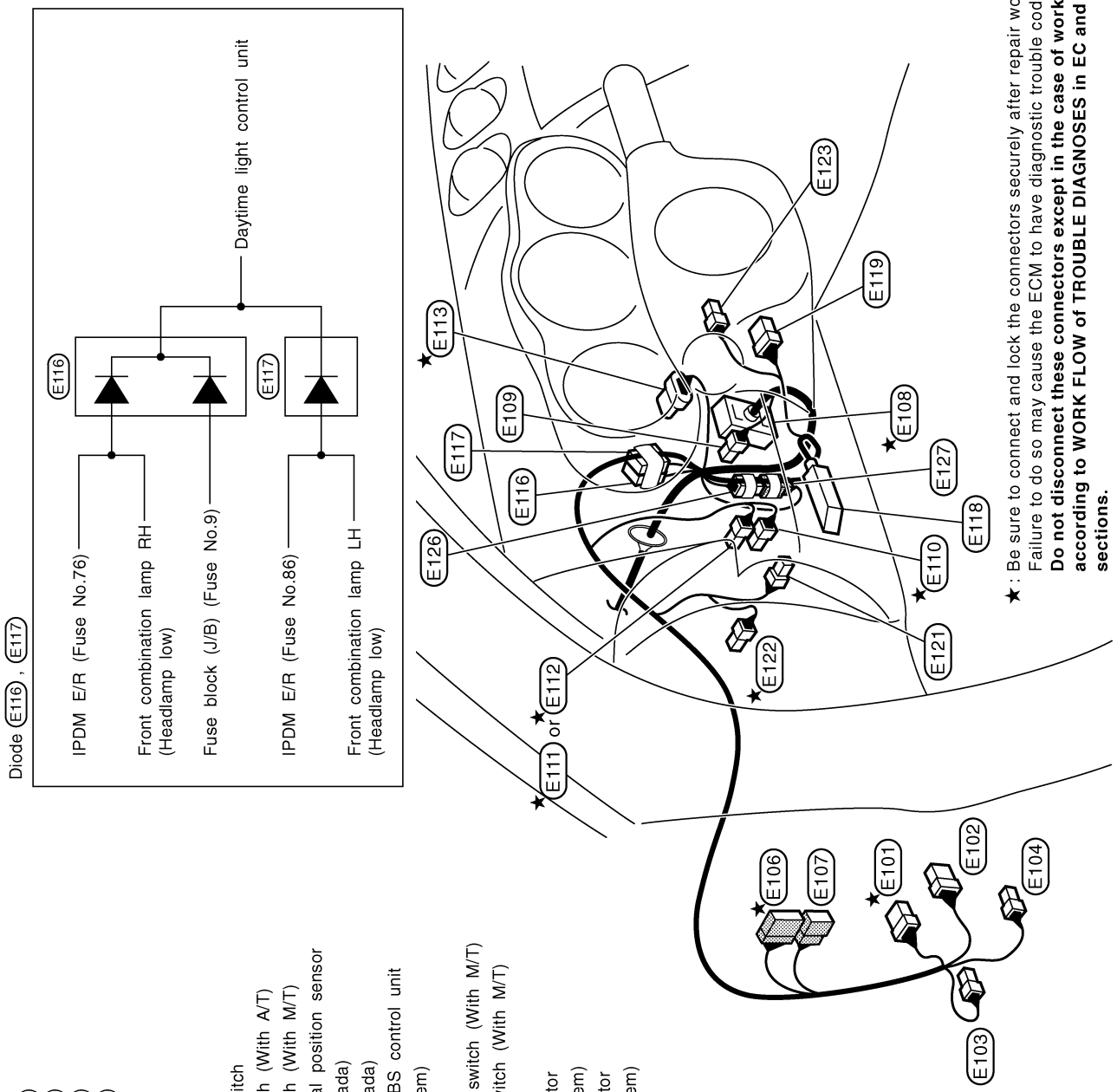

TKIT0291E

Battery Cable

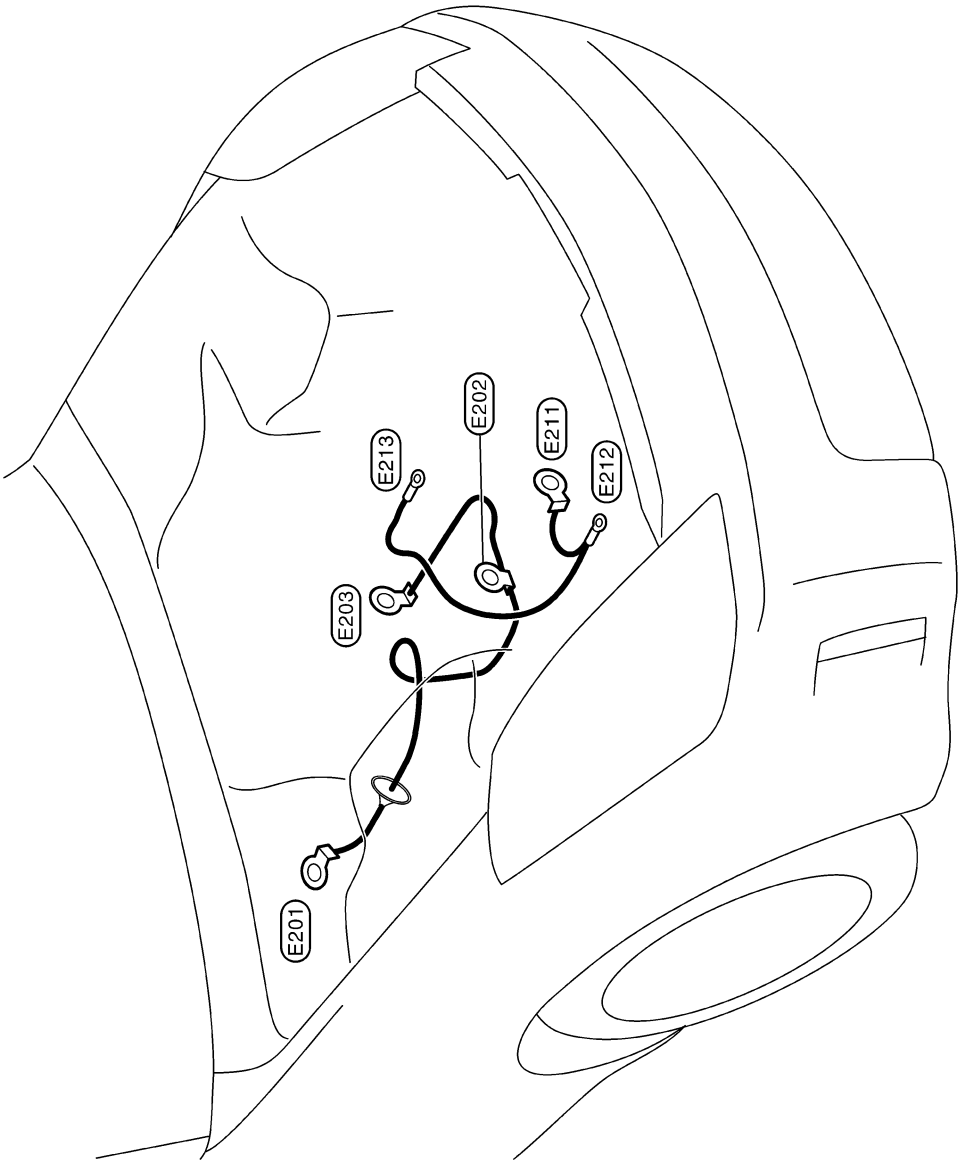

For detail ground distribution information, refer to "GROUND DISTRIBUTION".

E201 : Fusible link holder
E202 : Alternator (B)
E203 : Starter motor
E211 : Alternator (E)
E212 : Body ground
E213 : Engine ground

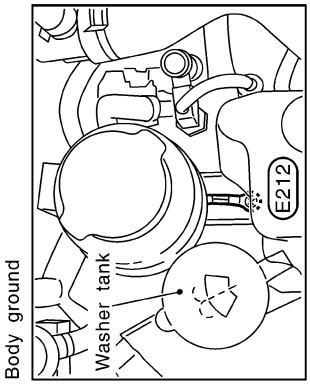

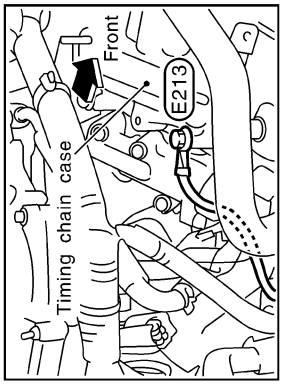

CKIT0202E

ENGINE CONTROL HARNESS

Engine Compartment

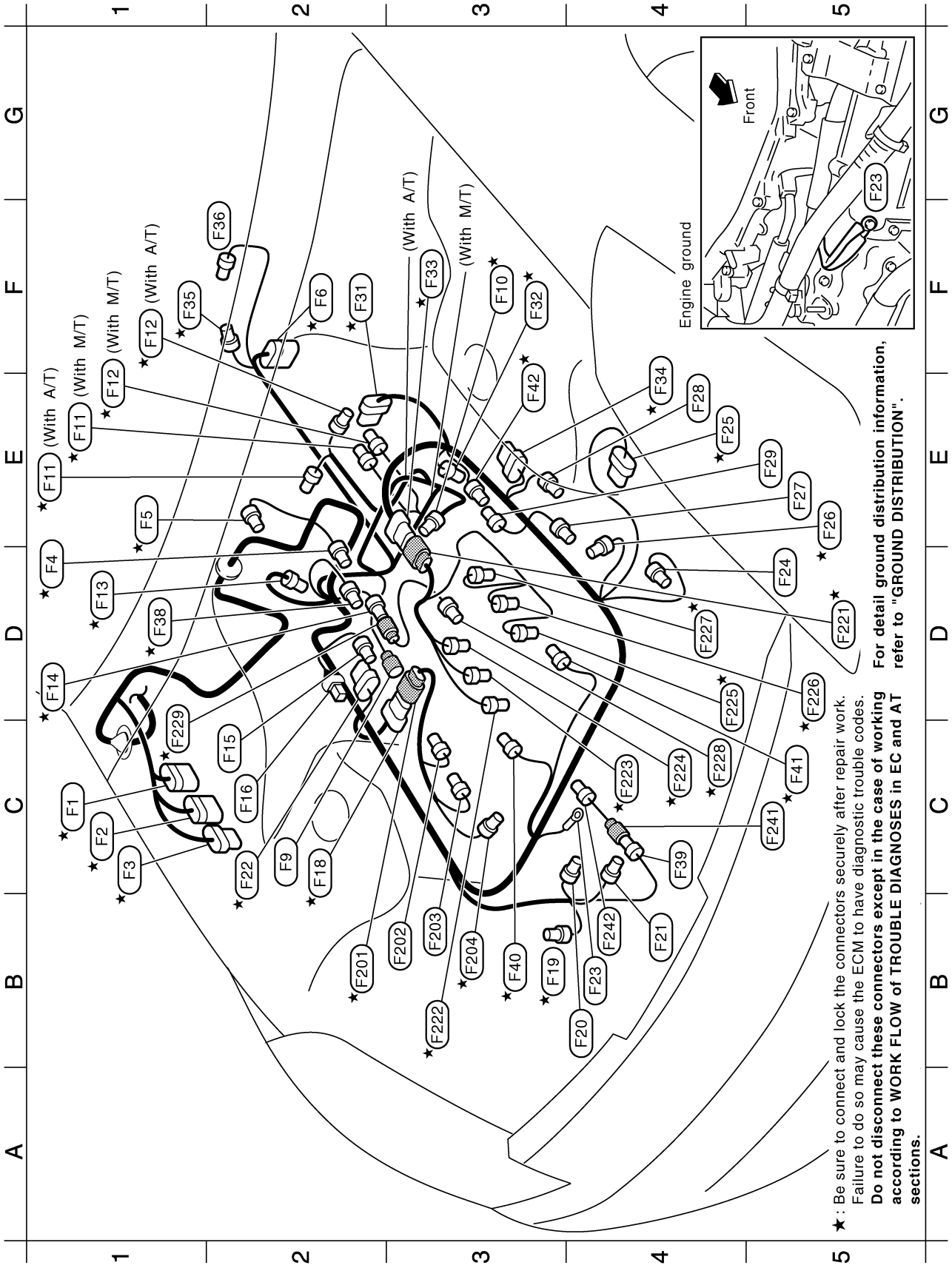

TKIT0423E

C1 ★	F1	GY/9	:	To E10
C1 ★	F2	GY/10	:	To E11
C1 ★	F3	GY/8	:	To E12
D1 ★	F4	GY/3	:	Camshaft position sensor (PHASE) (Bank 1)
E1 ★	F5	GY/2	:	EVAP canister purge volume control solenoid valve
F2 ★	F6	GY/10	:	A/T assembly (With A/T)
C2	F9	GY/1	:	Starter motor
F3 ★	F10	B/3	:	Crankshaft position sensor (POS)
E1 ★	F11	B/4	:	Heated oxygen sensor 2 (Bank 1)
E1,F1 ★	F12	GY/4	:	Heated oxygen sensor 2 (Bank 2)
D1 ★	F13	GY/2	:	Engine coolant temperature sensor
D1 ★	F14	B/2	:	To F229
C2	F15	GY/3	:	Ignition coil No.5 (With power transistor)
C2	F16	W/2	:	Condenser
C2 ★	F18	B/6	:	To F201
B3 ★	F19	B/3	:	Power steering pressure sensor
B4	F20	GY/2	:	Alternator (S, L)
B4	F21	B/3	:	Oil pressure sensor
C2 ★	F22	B/6	:	Air fuel ratio (A/F) sensor 1 (Bank 1)
B4	F23	—	:	Engine ground
D5	F24	B/1	:	Compressor
E4 ★	F25	B/6	:	Mass air flow sensor
E5 ★	F26	GY/2	:	Intake valve timing control solenoid valve (Bank 2)
E5	F27	GY/3	:	Ignition coil No.2 (With power transistor)
E4	F28	GY/3	:	Ignition coil No.4 (With power transistor)
E5	F29	GY/3	:	Ignition coil No.6 (With power transistor)
F2 ★	F31	GY/6	:	Electric throttle control actuator
F3 ★	F32	B/3	:	Camshaft position sensor (PHASE) (Bank 2)
F3 ★	F33	GY/8	:	To F221
E4 ★	F34	B/6	:	Air fuel ratio (A/F) sensor 1 (Bank 2)
F1 ★	F35	B/2	:	Park/Neutral position switch (With M/T)
F2	F36	B/2	:	Back-up lamp switch (With M/T)
D1 ★	F38	B/3	:	Exhaust valve timing control position sensor (Bank 1) (★1)
C4	F39	GY/2	:	To F241 (★1)
B3 ★	F40	B/4	:	Exhaust valve timing control magnet retarder (Bank 1) (★1)
C5 ★	F41	B/4	:	Exhaust valve timing control magnet retarder (Bank 2) (★1)
E3 ★	F42	GY/3	:	Exhaust valve timing control position sensor (Bank 2) (★1)

Engine control sub-harness-1

B2 ★	F201	L/6	:	To F18
B3	F202	GY/3	:	Ignition coil No.3 (With power transistor)
B3	F203	GY/3	:	Ignition coil No.1 (With power transistor)
B3 ★	F204	G/2	:	Intake valve timing control solenoid valve (Bank 1)

Engine control sub-harness-2

D5 ★	F221	G/8	:	To F33
B3 ★	F222	GY/2	:	Injector No.1
C4 ★	F223	GY/2	:	Injector No.3
C4 ★	F224	GY/2	:	Injector No.5
D4 ★	F225	GY/2	:	Injector No.2
D5 ★	F226	GY/2	:	Injector No.4
D4 ★	F227	GY/2	:	Injector No.6
C4 ★	F228	L/2	:	Knock sensor
C1 ★	F229	SB/2	:	To F14

Engine control sub-harness-3 (★1)

C5	F241	BR/2	:	To F39
B4	F242	GY/2	:	Engine oil temperature sensor

★1 : 35th Anniversary models with M/T

★: Be sure to connect and lock the connectors securely after repair work. Failure to do so may cause the ECM to have diagnostic trouble codes. **Do not disconnect these connectors except in the case of working according to WORK FLOW of TROUBLE DIAGNOSES in EC and AT sections.**

TKIT0424E

Passenger Compartment

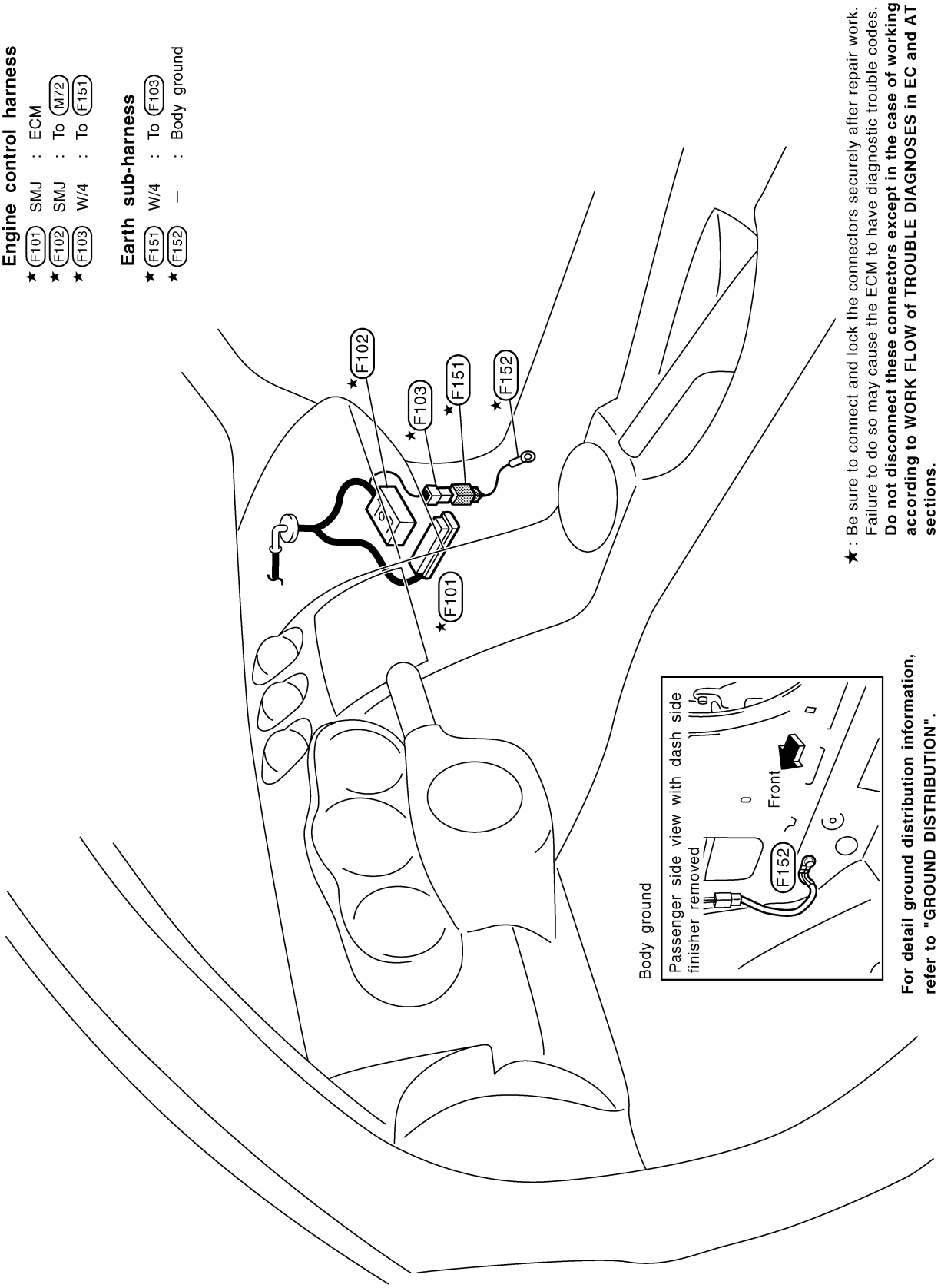

★: Be sure to connect and lock the connectors securely after repair work. Failure to do so may cause the ECM to have diagnostic trouble codes. **Do not disconnect these connectors except in the case of working according to WORK FLOW of TROUBLE DIAGNOSES in EC and AT sections.**

For detail ground distribution information, refer to "GROUND DISTRIBUTION".

TKIT0425E

BODY HARNESS
Coupe Models

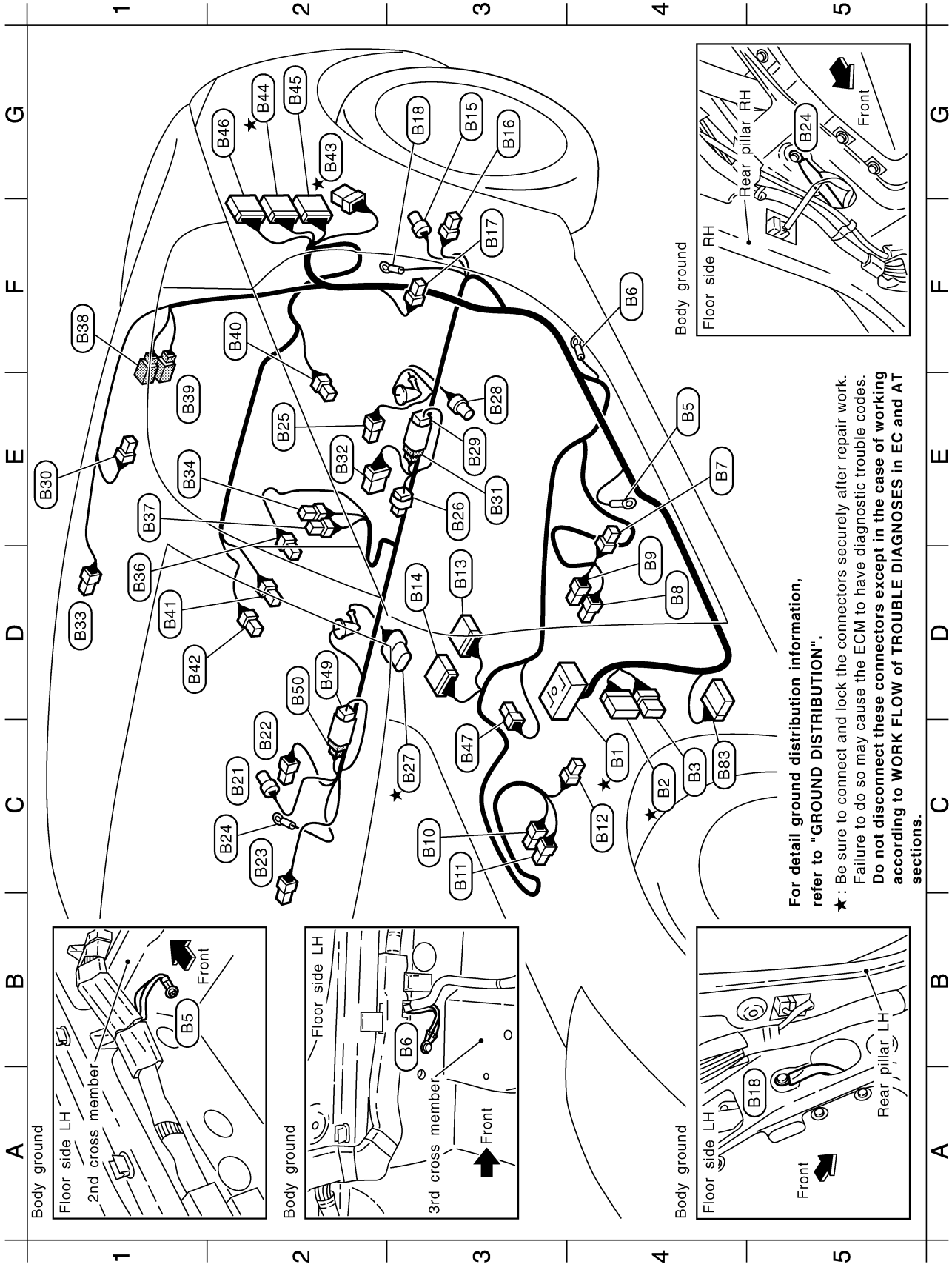

TKIT0294E

C4 ★	B1	SMJ	:	To M12
C4 ★	B2	W/18	:	To E106
C4	B3	W/6	:	To E107
E4	B5	—	:	Body ground
F4	B6	—	:	Body ground
E4	B7	W/4	:	Driver side seat (With heated seat or side air bag)
D4	B8	W/3	:	Seat belt buckle switch (Driver side)
D4	B9	Y/2	:	LH side air bag module (With side air bag)
C3	B10	Y/2	:	RH side air bag module (With side air bag)
C3	B11	W/3	:	Seat belt buckle switch (Passenger side)
C4	B12	W/4	:	Passenger side seat (With heated seat or side air bag)
D3	B13	Y/12	:	Air bag diagnosis sensor unit
D3	B14	Y/12	:	Air bag diagnosis sensor unit
G3	B15	Y/2	:	LH side air bag (satellite) sensor (With side air bag)
G3	B16	Y/2	:	Seat belt pre-tensioner LH
F3	B17	W/3	:	Driver side door switch
G3	B18	—	:	Body ground (With side air bag)
C2	B21	Y/2	:	RH side air bag (satellite) sensor (With side air bag)
C2	B22	Y/2	:	Seat belt pre-tensioner RH
C2	B23	W/3	:	Passenger side door switch
C2	B24	—	:	Body ground (With side air bag)
E2	B25	W/2	:	Woofer (With BOSE system)
E3	B26	W/2	:	Condenser
C3 ★	B27	GY/5	:	Fuel level sensor unit and fuel pump
E3	B28	GY/2	:	Fuel level sensor unit (Sub)
E3	B29	W/2	:	To B31
E1	B30	Y/2	:	LH side curtain air bag module (With side air bag)
E3	B31	W/2	:	To B29
E2	B32	BR/8	:	Woofer amp. (With BOSE system)
D1	B33	Y/2	:	RH side curtain air bag module (With side air bag)
E1	B34	BR/6	:	Rear window defogger relay
D1	B36	B/2	:	Power socket
E1	B37	L/4	:	Heated seat relay (With heated seat or side air bag)
F1	B38	W/3	:	To D101
E1	B39	GY/2	:	To D102
F2	B40	BR/2	:	Rear speaker LH
D1	B41	W/2	:	Luggage floor box lamp
D1	B42	BR/2	:	Rear speaker RH
G2 ★	B43	W/6	:	To T1
G2 ★	B44	W/16	:	To T2
G2	B45	W/10	:	To T3 (With BOSE system)
G2	B46	BR/20	:	To T4 (With BOSE system)
C3	B47	B/1	:	Parking brake switch
D2	B49	BR/2	:	To B50
D2	B50	BR/2	:	To B49
C4	B83	W/15	:	BCM (Body control module)

★ : Be sure to connect and lock the connectors securely after repair work. Failure to do so may cause the ECM to have diagnostic trouble codes. **Do not disconnect these connectors except in the case of working according to WORK FLOW of TROUBLE DIAGNOSES in EC and AT sections.**

TKIT0295E

Roadster Models

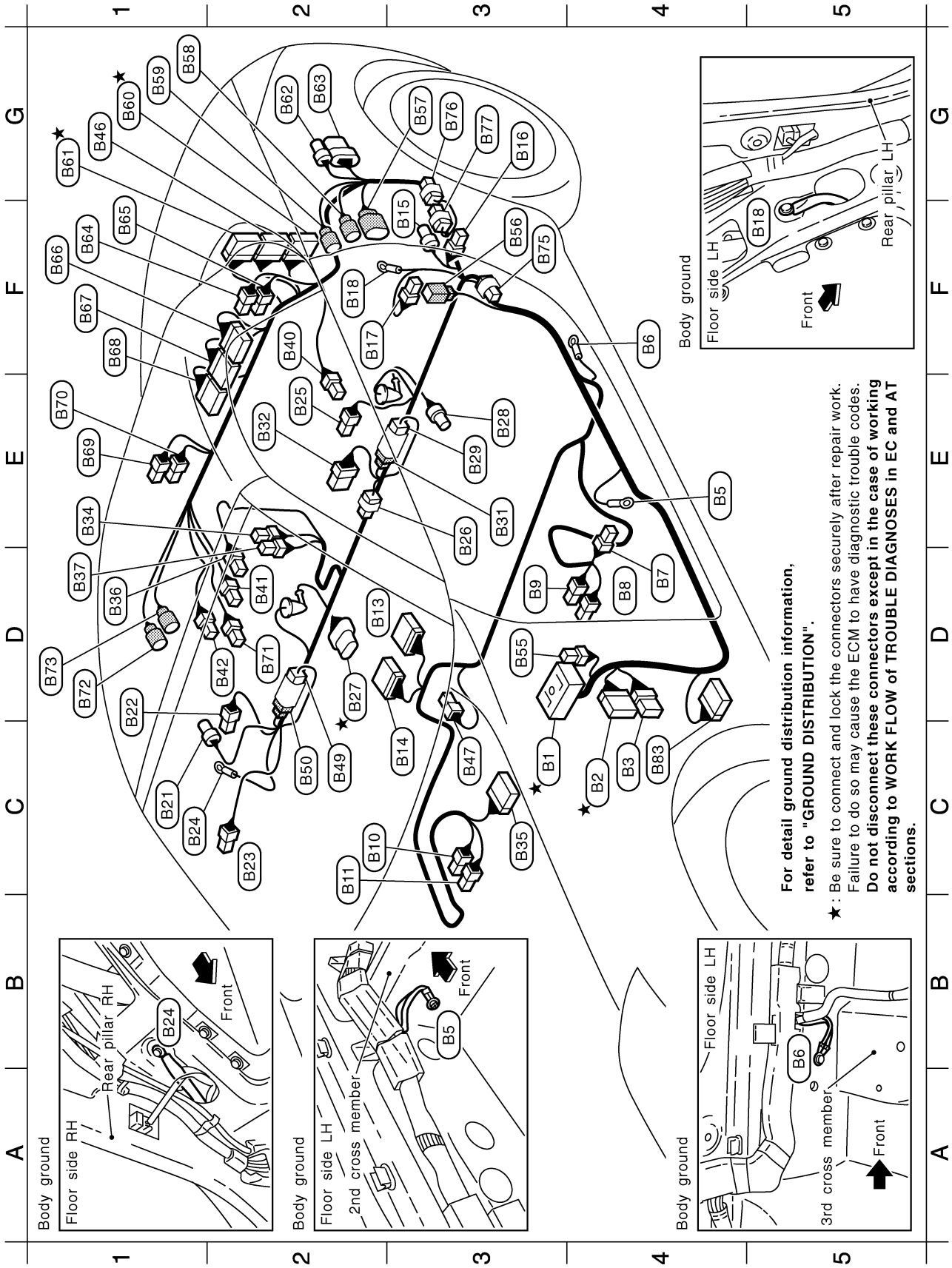

TKIT0296E

C3 ★	B1	SMJ	:	To M12
C4 ★	B2	W/18	:	To E106
C4	B3	W/6	:	To E107
E4	B5	—	:	Body ground
F4	B6	—	:	Body ground
D4	B7	W/4	:	Driver side seat
D4	B8	W/3	:	Seat belt buckle switch (Driver side)
D3	B9	Y/2	:	LH side air bag module (With side air bag)
C2	B10	Y/2	:	RH side air bag module (With side air bag)
C2	B11	W/3	:	Seat belt buckle switch (Passenger side)
D2	B13	Y/12	:	Air bag diagnosis sensor unit
C3	B14	Y/12	:	Air bag diagnosis sensor unit
F3	B15	Y/2	:	LH side air bag (satellite) sensor (With side air bag)
G3	B16	Y/2	:	Seat belt pre-tensioner LH
F2	B17	W/3	:	Driver side door switch
F2	B18	—	:	Body ground (With side air bag)
C1	B21	Y/2	:	RH side air bag (satellite) sensor (With side air bag)
D1	B22	Y/2	:	Seat belt pre-tensioner RH
C2	B23	W/3	:	Passenger side door switch
C1	B24	—	:	Body ground (With side air bag)
E2	B25	W/2	:	Woofer (With BOSE system)
E3	B26	W/2	:	Condenser
D2 ★	B27	GY/5	:	Fuel level sensor unit and fuel pump
E3	B28	GY/2	:	Fuel level sensor unit (Sub)
E3	B29	W/2	:	To B31
E3	B31	W/2	:	To B29
E2	B32	BR/8	:	Woofer amp. (With BOSE system)
E1	B34	BR/6	:	Rear window defogger relay
C3	B35	W/18	:	Passenger side seat
D1	B36	B/2	:	Power socket
D1	B37	L/4	:	Heated seat relay (With heated seat or side air bag)
F2	B40	BR/2	:	Rear speaker LH
D2	B41	W/2	:	Luggage floor box lamp
D2	B42	BR/2	:	Rear speaker RH
G1	B46	BR/20	:	To T4 (With BOSE system)
C3	B47	B/1	:	Parking brake switch
C2	B49	BR/2	:	To B50
C2	B50	BR/2	:	To B49
D3	B55	W/2	:	Circuit breaker
F3	B56	W/2	:	Short connector
G3	B57	GY/8	:	Soft top assembly
G1	B58	B/2	:	Soft top assembly
G1	B59	GY/2	:	Roof actuator LH
G1 ★	B60	W/20	:	To T22
G1 ★	B61	W/16	:	To T23
G2	B62	GY/4	:	To T24 (With BOSE system)
G2	B63	B/6	:	To T25 (With BOSE system)
F1	B64	W/2	:	Storage lid switch LH (Close)
F1	B65	B/2	:	Storage lid unlock actuator LH
F1	B66	W/16	:	Soft top control unit
F1	B67	W/20	:	Soft top control unit
F1	B68	W/12	:	Soft top control unit
E1	B69	W/2	:	Storage lid switch RH (Close)
E1	B70	B/2	:	Storage lid unlock actuator RH
D2	B71	W/2	:	Trunk opener cancel switch
D1	B72	GY/2	:	Roof actuator RH
D1	B73	B/2	:	Rear window defogger (Via sub-harness)
F3	B75	W/2	:	Diode
G3	B76	W/2	:	Diode
G3	B77	W/2	:	Diode
C4	B83	W/15	:	BCM (Body control module)

★: Be sure to connect and lock the connectors securely after repair work. Failure to do so may cause the ECM to have diagnostic trouble codes. **Do not disconnect these connectors except in the case of working according to WORK FLOW of TROUBLE DIAGNOSES in EC and AT sections.**

TKIT0297E

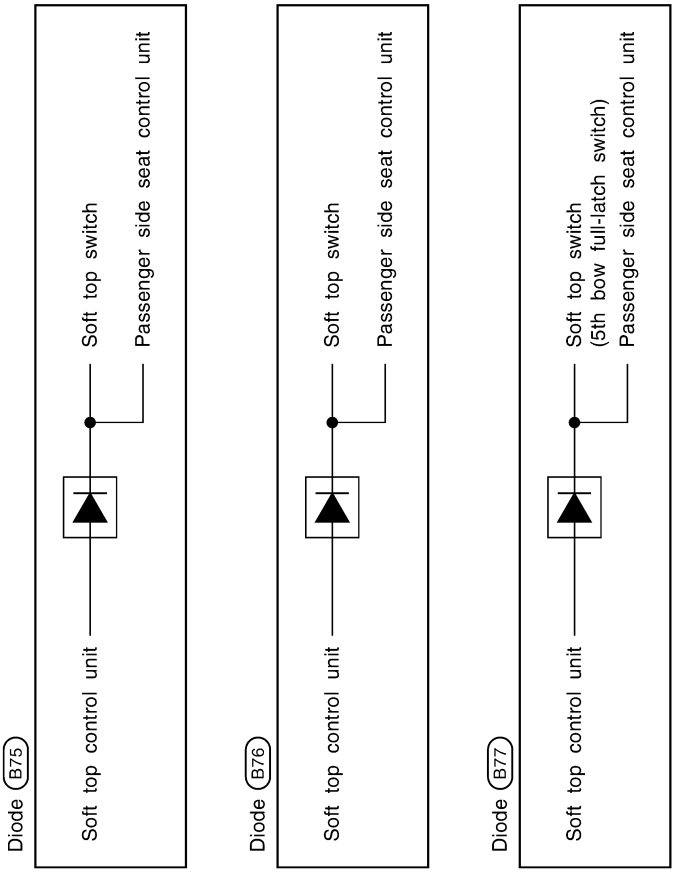
Diode B75
Soft top control unit
Soft top switch
Passenger side seat control unit
Diode B76
Soft top control unit
Soft top switch
Passenger side seat control unit
Diode B77
Soft top control unit
Soft top switch
(5th bow full-latch switch)
Passenger side seat control unit

TKIT0117E

BODY NO. 2 HARNESS

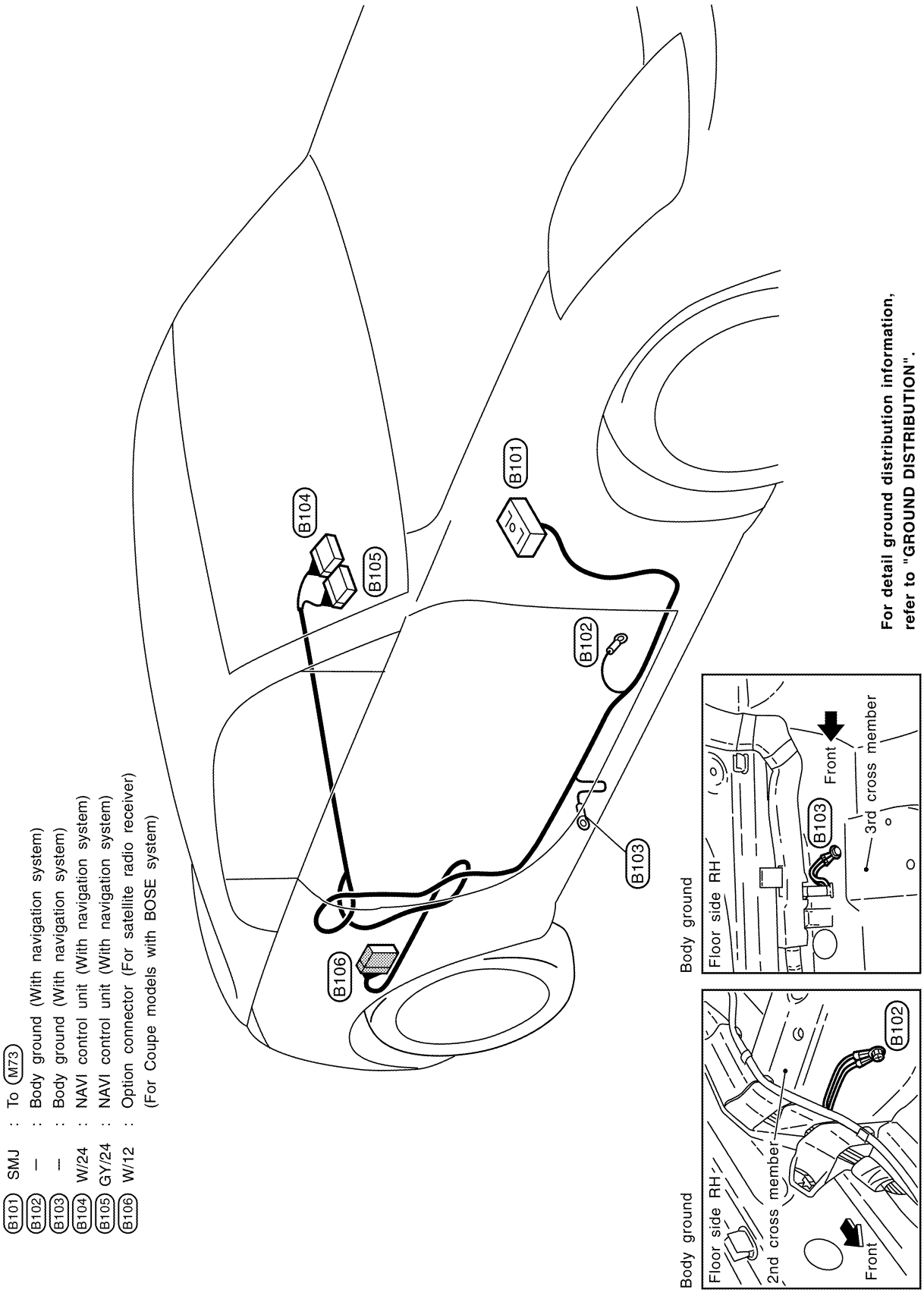

For detail ground distribution information, refer to "GROUND DISTRIBUTION".

TKIT0226E

TAIL HARNESS
Coupe Models

★	T1	W/6	: To B43
★	T2	W/16	: To B44
	T3	W/10	: To B45 (With BOSE system)
	T4	BR/20	: To B46 (With BOSE system)
	T5	GY/4	: Rear wheel sensor
	T6	GY/8	: BOSE speaker amp. (With BOSE system)
	T7	B/24	: BOSE speaker amp. (With BOSE system)
	T8	GY/2	: Rear combination lamp LH (Body side)
	T9	GY/3	: Rear combination lamp LH (Body side)
	T10	SB/4	: Rear combination lamp LH (Bumper side)
	T11	W/4	: Back door opener actuator
	T12	W/3	: Back door switch
	T13	GY/2	: Luggage room lamp
	T14	—	: Body ground
	T15	GY/4	: To T101
	T16	GY/2	: Rear combination lamp RH (Body side)
	T17	GY/3	: Rear combination lamp RH (Body side)
	T18	SB/4	: Rear combination lamp RH (Bumper side)
	T19	W/4	: Fuel lid opener actuator
★	T20	B/2	: EVAP canister vent control valve
★	T21	GY/3	: EVAP control system pressure sensor

Tail sub-harness-1

T101	GY/4	:	To T15
T102	BR/2	:	License plate lamp LH
T103	GY/2	:	Back door opener switch
T104	BR/2	:	License plate lamp RH

★: Be sure to connect and lock the connectors securely after repair work. Failure to do so may cause the ECM to have diagnostic trouble codes. **Do not disconnect these connectors except in the case of working according to WORK FLOW of TROUBLE DIAGNOSES in EC and AT sections.**

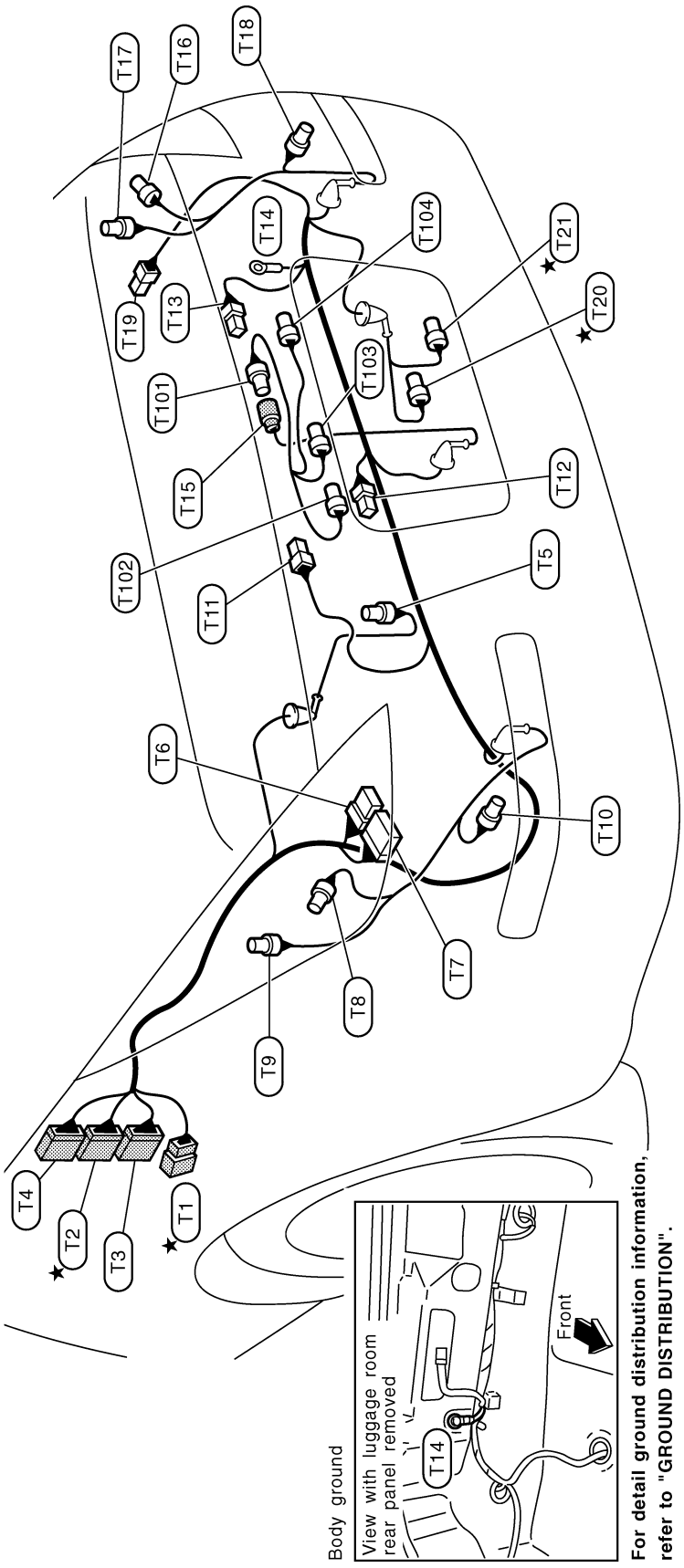

For detail ground distribution information, refer to "GROUND DISTRIBUTION".

TKIT0298E

Roadster Models

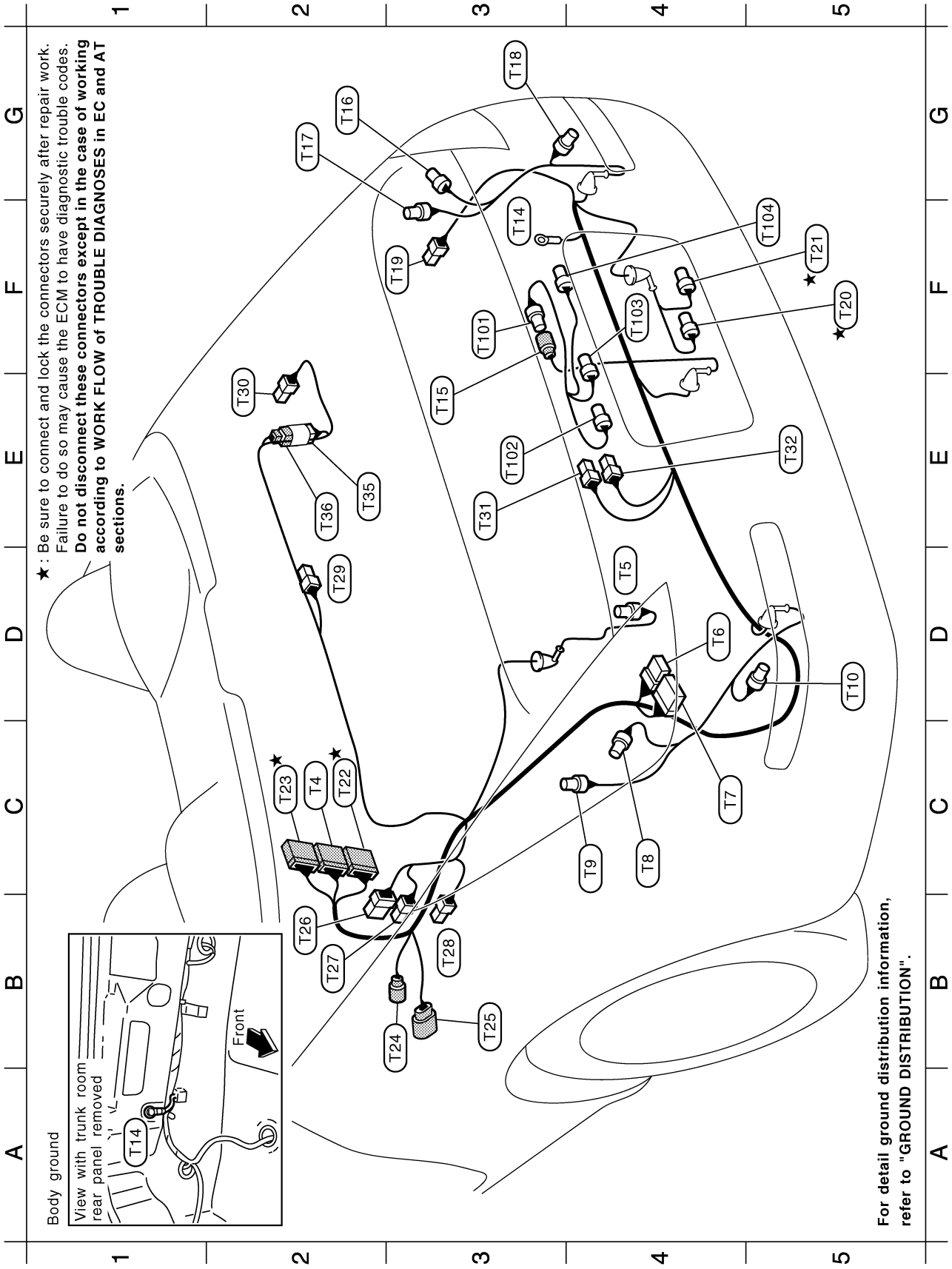

TKIT0299E

C2	T4	BR/20	:	To B46 (With BOSE system)
D4	T5	GY/4	:	Rear wheel sensor
D4	T6	GY/8	:	BOSE speaker amp. (With BOSE system)
C4	T7	B/24	:	BOSE speaker amp. (With BOSE system)
C4	T8	GY/2	:	Rear combination lamp LH (Body side)
C4	T9	GY/3	:	Rear combination lamp LH (Body side)
D5	T10	SB/4	:	Rear combination lamp LH (Bumper side)
F3	T14	—	:	Body ground
E3	T15	GY/4	:	To T101
G2	T16	GY/2	:	Rear combination lamp RH (Body side)
G2	T17	GY/3	:	Rear combination lamp RH (Body side)
G3	T18	SB/4	:	Rear combination lamp RH (Bumper side)
F3	T19	W/4	:	Fuel lid opener actuator
F5 ★	T20	B/2	:	EVAP canister vent control valve
F5 ★	T21	GY/3	:	EVAP control system pressure sensor
C2 ★	T22	W/20	:	To B60
C2 ★	T23	W/16	:	To B61
B3	T24	GY/4	:	To B62 (With BOSE system)
B3	T25	B/6	:	To B63 (With BOSE system)
B2	T26	W/8	:	To T151
B2	T27	B/2	:	Storage lid switch (Open)
B3	T28	W/2	:	Storage lid actuator LH
D2	T29	W/2	:	Trunk room lamp
E2	T30	W/2	:	Storage lid actuator RH
E3	T31	W/2	:	Trunk room lamp switch
E5	T32	B/2	:	Trunk lid opener actuator
E2	T35	W/2	:	To T36
E2	T36	W/2	:	To T35

Tail sub-harness-1

F3	T101	GY/4	:	To T15
E3	T102	BR/2	:	License plate lamp LH
F4	T103	GY/2	:	Trunk lid opener switch
F5	T104	BR/2	:	License plate lamp RH

★: Be sure to connect and lock the connectors securely after repair work. Failure to do so may cause the ECM to have diagnostic trouble codes. **Do not disconnect these connectors except in the case of working according to WORK FLOW of TROUBLE DIAGNOSES in EC and AT sections.**

TKIT0300E

TAIL NO. 2 HARNESS
Roadster Models

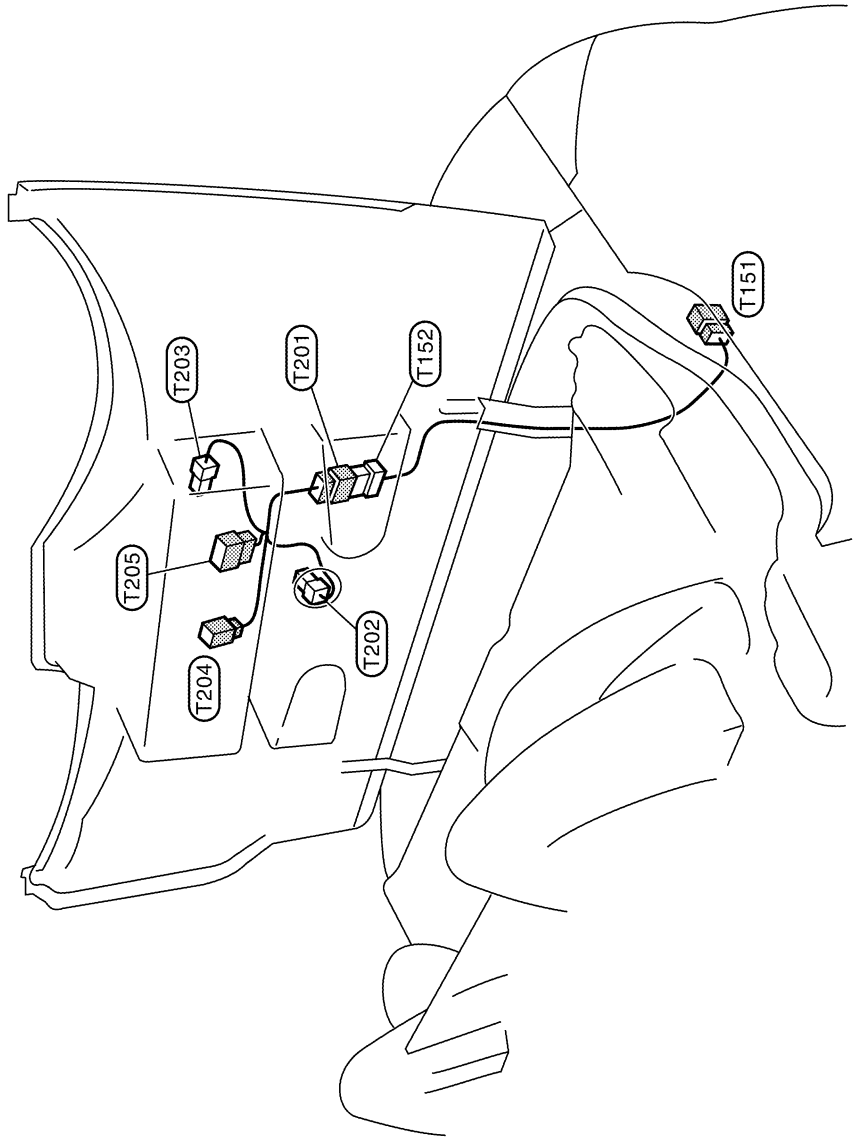

Tail No.2 harness

T201	W/8	:	To T152
T202	BR/2	:	High-mounted stop lamp
T203	W/4	:	5th bow unlock actuator
T204	B/2	:	5th bow closure motor
T205	W/6	:	Soft top lock switch

Tail sub-harness-2

T151	W/8	:	To T26
T152	W/8	:	To T201

TKIT0113E

ROOM LAMP HARNESS
Coupe Models

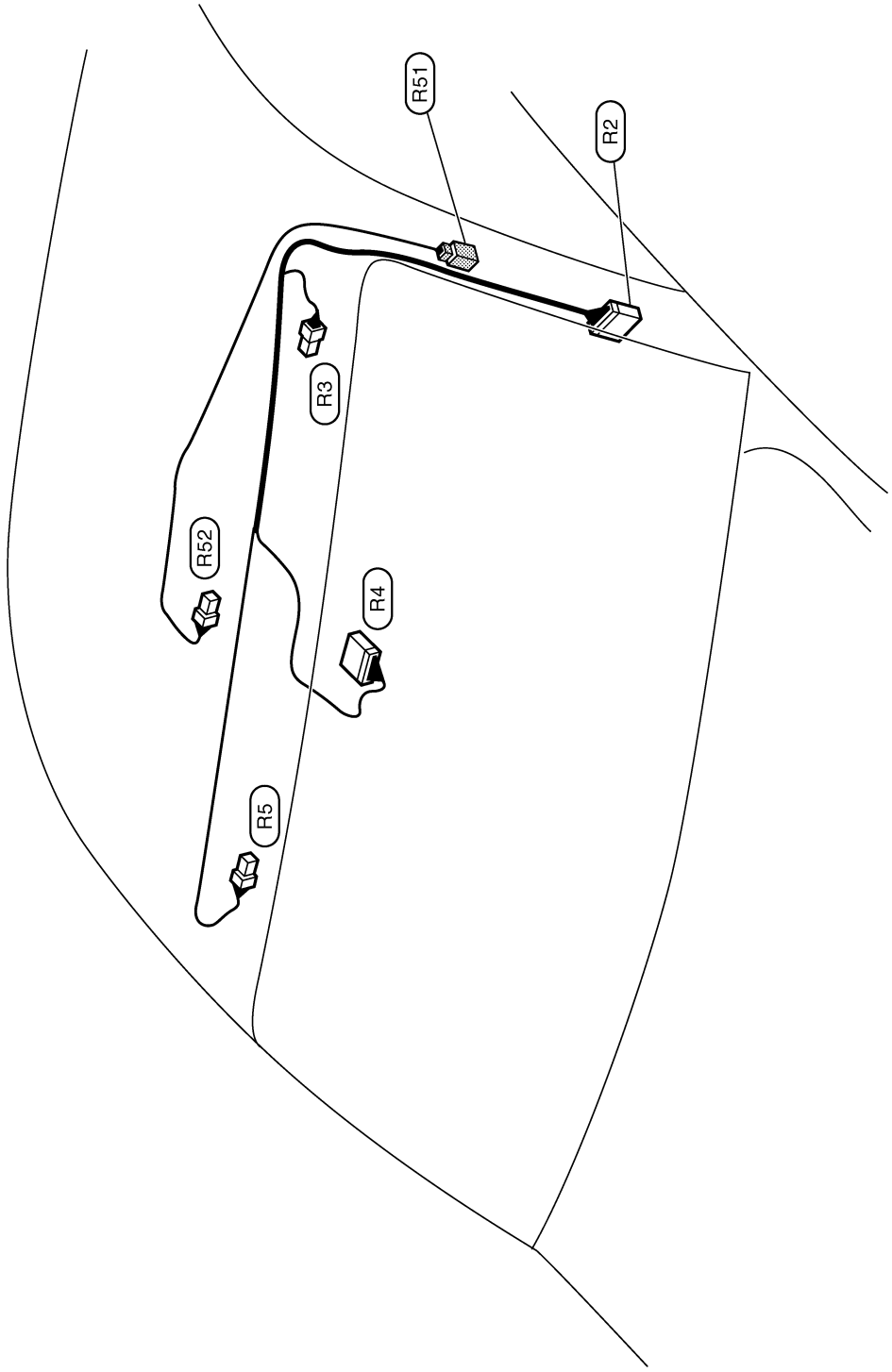

Room lamp sub-harness

R51 W/4 : To M70
R52 W/3 : Map lamp

R2 W/12 : To M93
R3 W/2 : Vanity mirror lamp LH
R4 B/10 : Auto anti-dazzling inside mirror
R5 W/2 : Vanity mirror lamp RH

TKIT0301E

Roadster Models

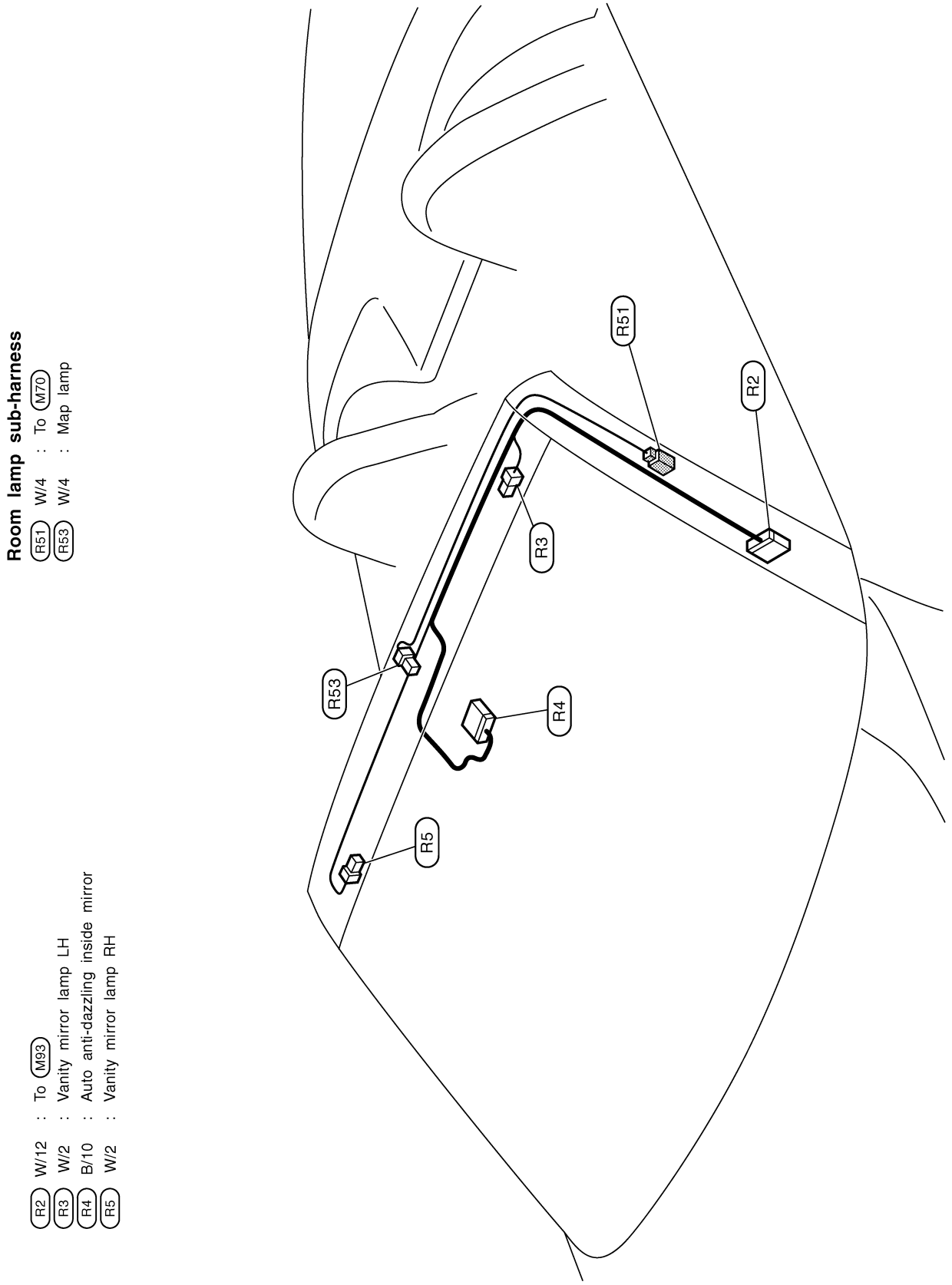

TKIT0302E

DOOR HARNESS

Driver Side Door

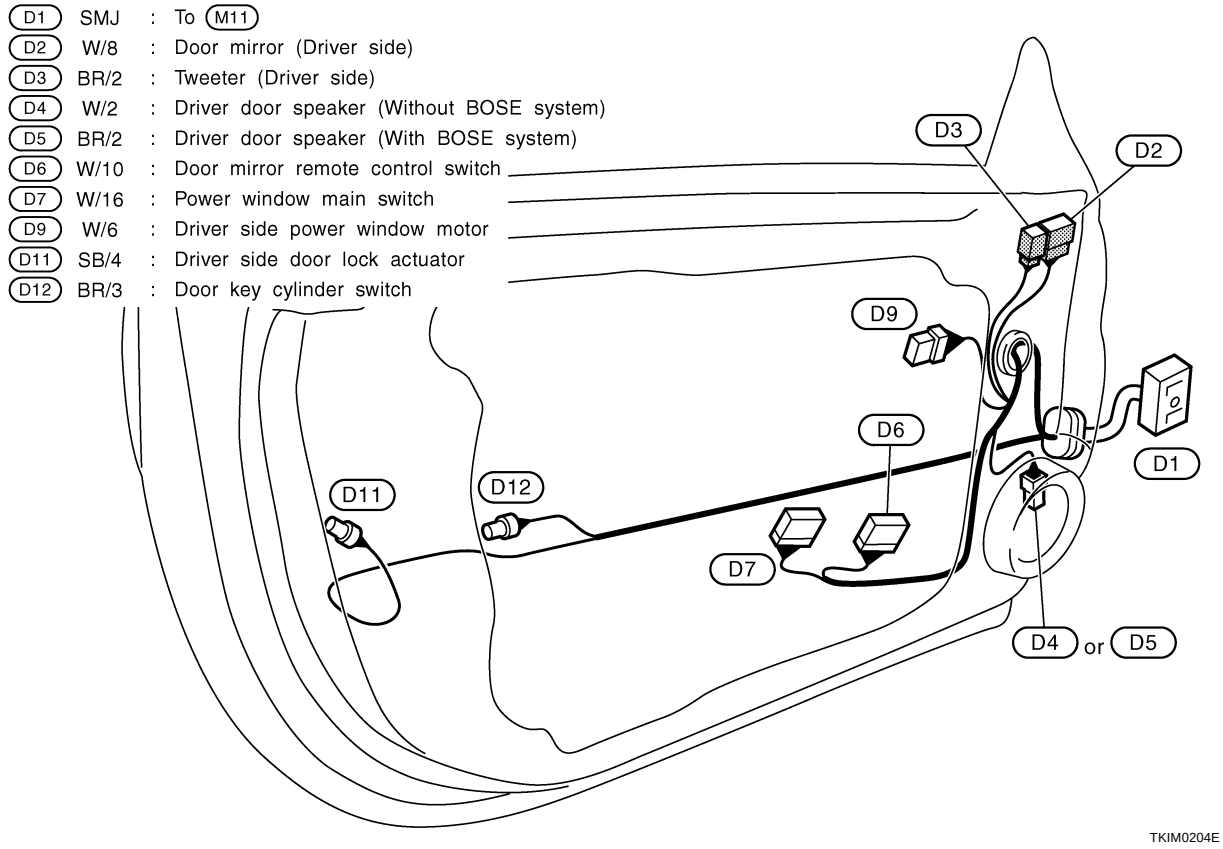

TKIM0204E

Passenger Side Door

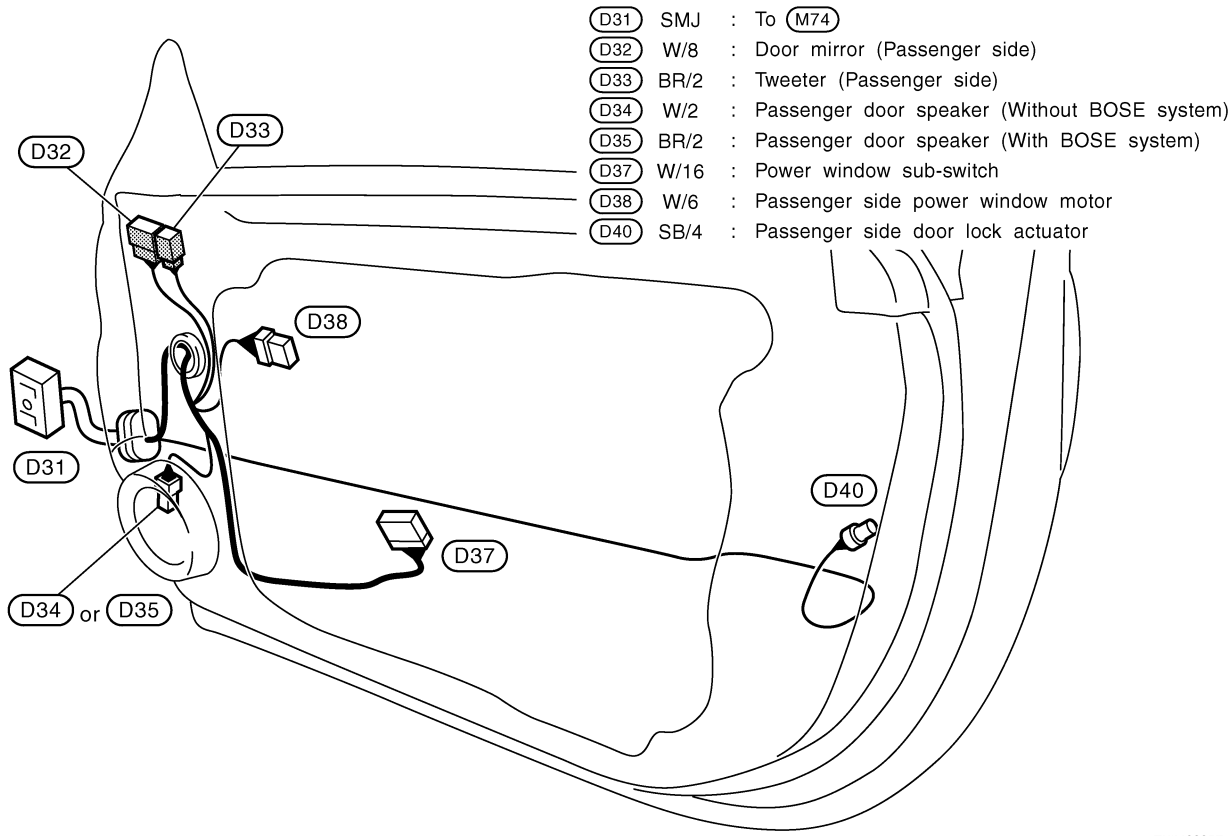

TKIM0205E

Back Door

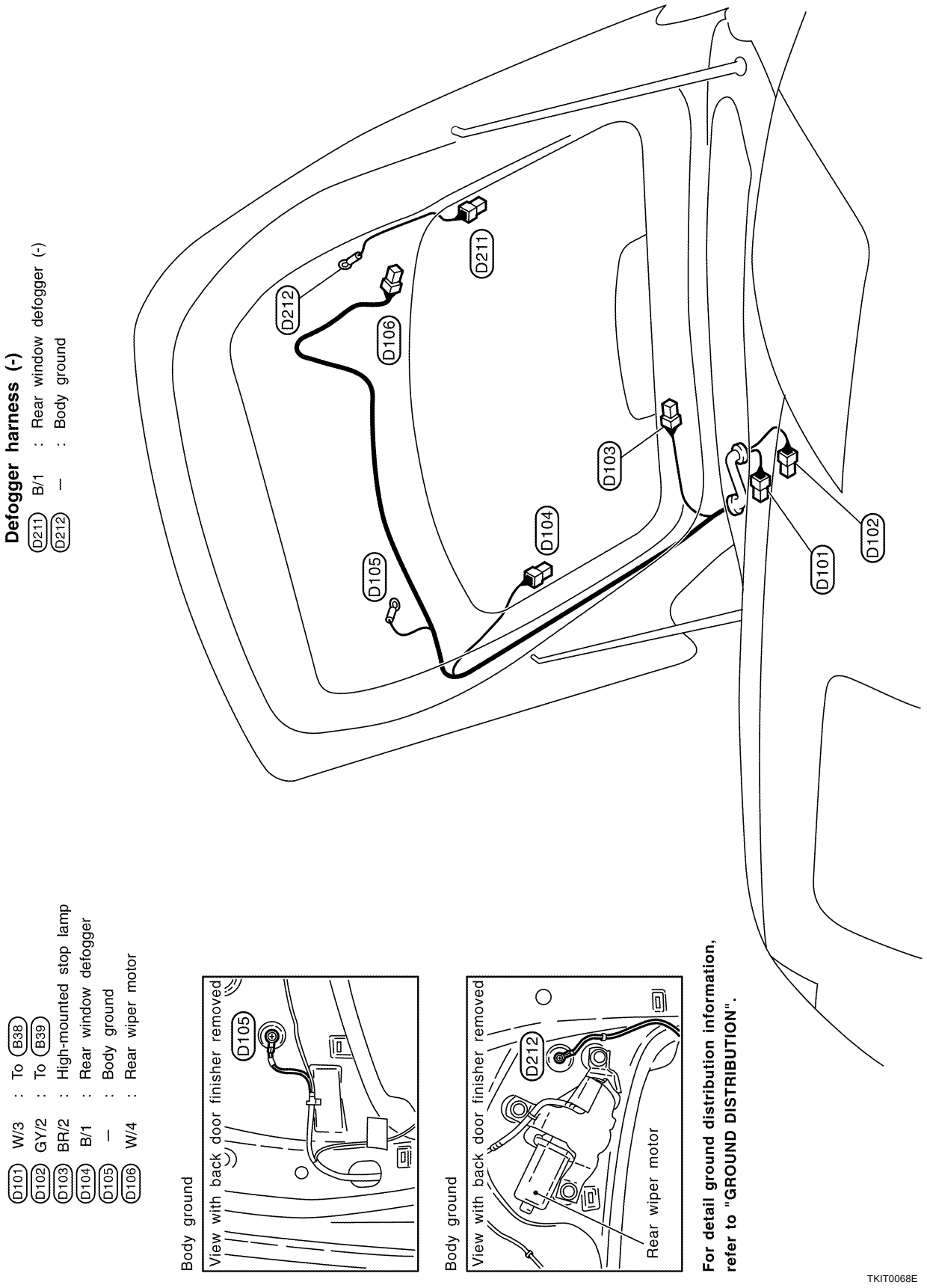
Defogger harness (-)
D211 B/1 : Rear window defogger (-)
D212 — : Body ground
D101 W/3 : To B38
D102 GY/2 : To B39
D103 BR/2 : High-mounted stop lamp
D104 B/1 : Rear window defogger
D105 — : Body ground
D106 W/4 : Rear wiper motor
D211
D212
D106
D105
D104
D103
D101
D102
Body ground
View with back door finisher removed
D105
Body ground
View with back door finisher removed
D212
Rear wiper motor
For detail ground distribution information, refer to "GROUND DISTRIBUTION".
TKIT0068E

Wiring Diagram Codes (Cell Codes)

AKS00A3P

Use the chart below to find out what each wiring diagram code stands for.
Refer to the wiring diagram code in the alphabetical index to find the location (page number) of each wiring diagram.

Code	Section	Wiring Diagram Name
3METER	DI	Triple Meter
ABS	BRC	Anti-Lock Brake System
A/C	ATC	Air Conditioner
AF1B1	EC	Air Fuel Ratio Sensor 1 Bank 1
AF1B2	EC	Air Fuel Ratio Sensor 1 Bank 2
AF1HB1	EC	Air Fuel Ratio Sensor 1 Heater Bank 1
AF1HB2	EC	Air Fuel Ratio Sensor 1 Heater Bank 2
APPS1	EC	Accelerator Pedal Position Sensor
APPS2	EC	Accelerator Pedal Position Sensor
APPS3	EC	Accelerator Pedal Position Sensor
ASC/BS	EC	Automatic Speed Control Device (ASCD) Brake Switch
ASC/SW	EC	Automatic Speed Control Device (ASCD) Steering Switch
ASCBOF	EC	Automatic Speed Control Device (ASCD) Brake Switch
ASCIND	EC	Automatic Speed Control Device (ASCD) Indicator
AT/IND	DI	A/T Indicator Lamp
AUDIO	AV	Audio
BACK/L	LT	Back-Up Lamp
BRK/SW	EC	Brake Switch
CAN	AT	CAN Communication Line
CAN	EC	CAN Communication Line
CAN	LAN	CAN System
CHARGE	SC	Charging System
CHIME	DI	Warning Chime
CLOCK	DI	Clock
COMBSW	LT	Combination Switch
COMM	AV	Audio Visual Communication Line
COOL/F	EC	Cooling Fan Control
DEF	GW	Rear Window Defogger
D/LOCK	BL	Power Door Lock
DTRL	LT	Headlamp - With Daytime Light System
ECM/PW	EC	ECM Power Supply for Back-Up
ECTS	EC	Engine Coolant Temperature Sensor
ETC1	EC	Electric Throttle Control Function
ETC2	EC	Electric Throttle Control Motor Relay
ETC3	EC	Electric Throttle Control Motor
EVCB1	EC	Exhaust Valve Timing Control Magnet Retarder (Bank 1)
EVCB2	EC	Exhaust Valve Timing Control Magnet Retarder (Bank 2)
EVCSB1	EC	Exhaust Valve Timing Control Position Sensor (Bank 1)
EVCSB2	EC	Exhaust Valve Timing Control Position Sensor (Bank 2)
F/LID	BL	Fuel Lid Opener
F/PUMP	EC	Fuel Pump

Code	Section	Wiring Diagram Name
F/ROOF	RF	Soft Top
FTS	AT	A/T Fluid Temperature Sensor Circuit
FTTS	EC	Fuel Tank Temperature Sensor
FUELB1	EC	Fuel Injection System Function (Bank 1)
FUELB2	EC	Fuel Injection System Function (Bank 2)
H/LAMP	LT	Headlamp
HORN	WW	Horn
HSEAT	SE	Heated Seat
IATS	EC	Intake Air Temperature Sensor
IGNSYS	EC	Ignition System
ILL	LT	Illumination
I/MIRR	GW	Inside Mirror (Auto Anti-Dazzling Mirror)
INJECT	EC	Injector
IVCB1	EC	Intake Valve Timing Control Solenoid Valve Bank 1
IVCB2	EC	Intake Valve Timing Control Solenoid Valve Bank 2
KEYLES	BL	Remote Keyless Entry System
KS	EC	Knock Sensor
MAFS	EC	Mass Air Flow Sensor
MAIN	AT	Main Power Supply and Ground Circuit
MAIN	EC	Main Power Supply and Ground Circuit
M/ANT	AV	Manual Antenna
METER	DI	Speedometer, Tachometer, Temp. and Fuel Gauges
MIL/DL	EC	MIL & Data Link Connectors
MIRROR	GW	Power Door Mirror
MMSW	AT	Manual Mode Switch
NATS	BL	Nissan Anti-Theft System
NAVI	AV	Navigation System
NONDTC	AT	Non-Detective Items
O2H2B1	EC	Heated Oxygen Sensor 2 Heater Bank 1
O2H2B2	EC	Heated Oxygen Sensor 2 Heater Bank 2
O2S2B1	EC	Heated Oxygen Sensor 2 Bank 1
O2S2B2	EC	Heated Oxygen Sensor 2 Bank 2
PGC/V	EC	EVAP Canister Purge Volume Control Solenoid Valve
PHSB1	EC	Camshaft Position Sensor (PHASE) (Bank 1)
PHSB2	EC	Camshaft Position Sensor (PHASE) (Bank 2)
PNP/SW	AT	Park/Neutral Position Switch
PNP/SW	EC	Park/Neutral Position Switch
POS	EC	Crankshaft Position Sensor (CKPS) (POS)
POWER	PG	Power Supply Routing
PRE/SE	EC	EVAP Control System Pressure Sensor
P/SCKT	WW	Power Socket
PS/SEN	EC	Power Steering Pressure Sensor
ROOM/L	LT	Interior Room Lamp
RP/SEN	EC	Refrigerant Pressure Sensor

Code	Section	Wiring Diagram Name
SEAT	SE	Power Seat
SEN/PW	EC	Sensor Power Supply
SHIFT	AT	A/T Shift Lock System
SRS	SRS	Supplemental Restraint System
START	SC	Starting System
STOP/L	LT	Stop Lamp
STSIG	AT	Start Signal Circuit
TAIL/L	LT	Parking, License and Tail Lamps
TCS	BRC	Traction Control System
TLID	BL	Trunk Lid Opener
TPS1	EC	Throttle Position Sensor (Sensor 1)
TPS2	EC	Throttle Position Sensor (Sensor 2)
TPS3	EC	Throttle Position Sensor
TRNSCV	BL	Homelink Universal Transceiver
TURN	LT	Turn Signal and Hazard Warning Lamp
T/WARN	WT	Low Tire Pressure Warning System
VDC	BRC	Vehicle Dynamics Control System
VEHSEC	BL	Vehicle Security System
VENT/V	EC	EVAP Canister Vent Control Valve
VSSA/T	AT	Vehicle Speed Sensor A/T (Revolution Sensor)
WARN	DI	Warning Lamps
WINDOW	GW	Power Window
WIPER	WW	Front Wiper and Washer
WIP/R	WW	Rear Wiper and Washer

ELECTRICAL UNITS LOCATION

PFP:25230

Electrical Units Location

AKS0012S

ENGINE COMPARTMENT

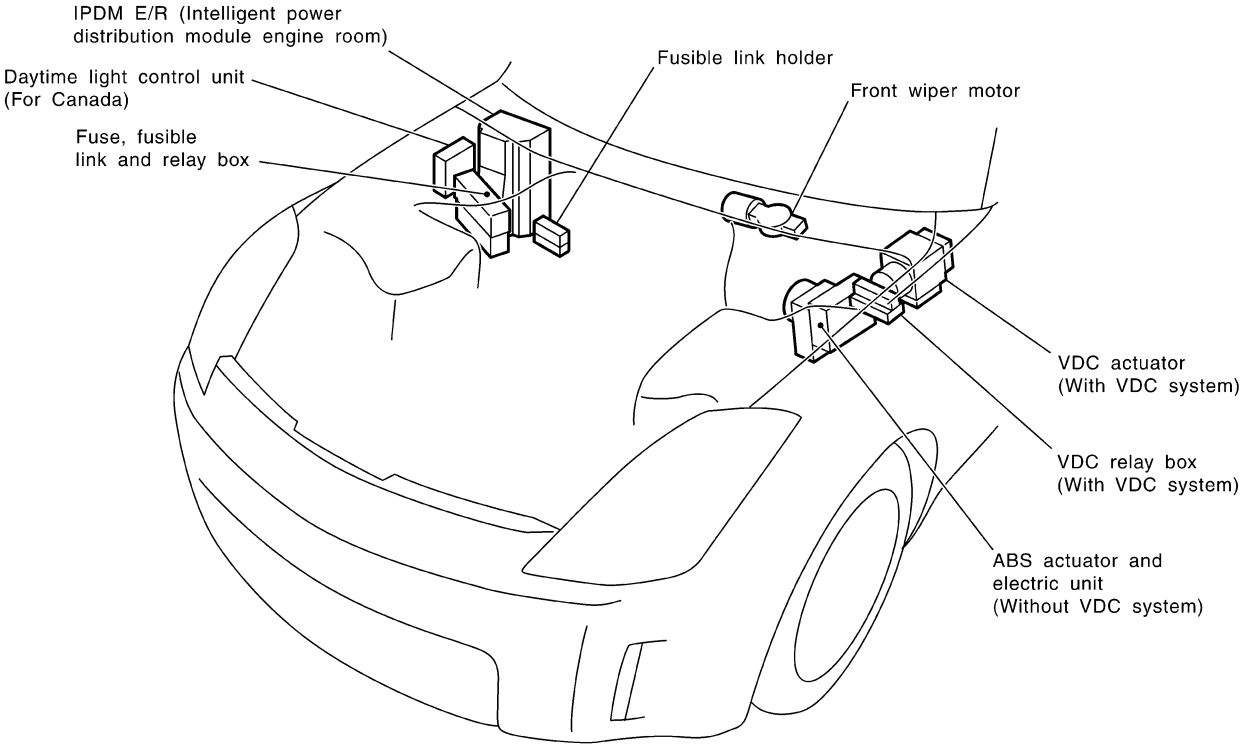

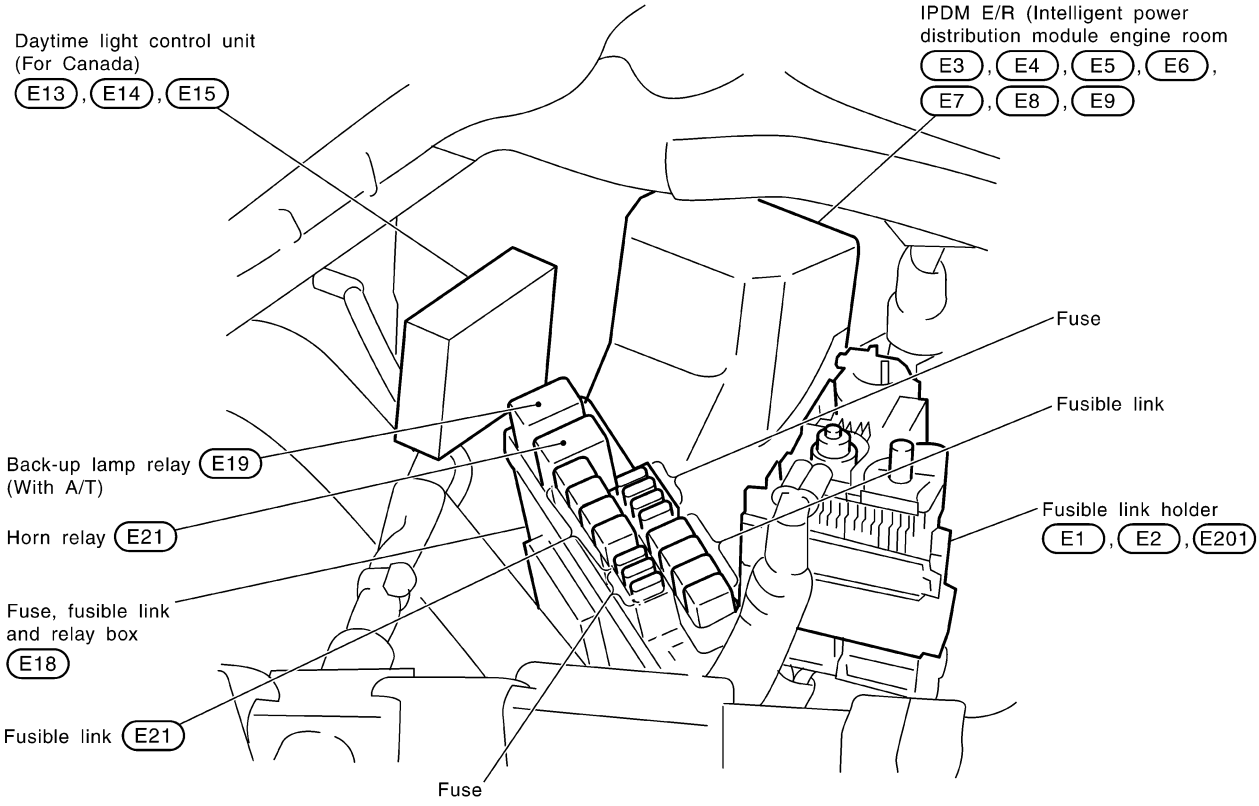

CKIT0212E

PASSENGER COMPARTMENT

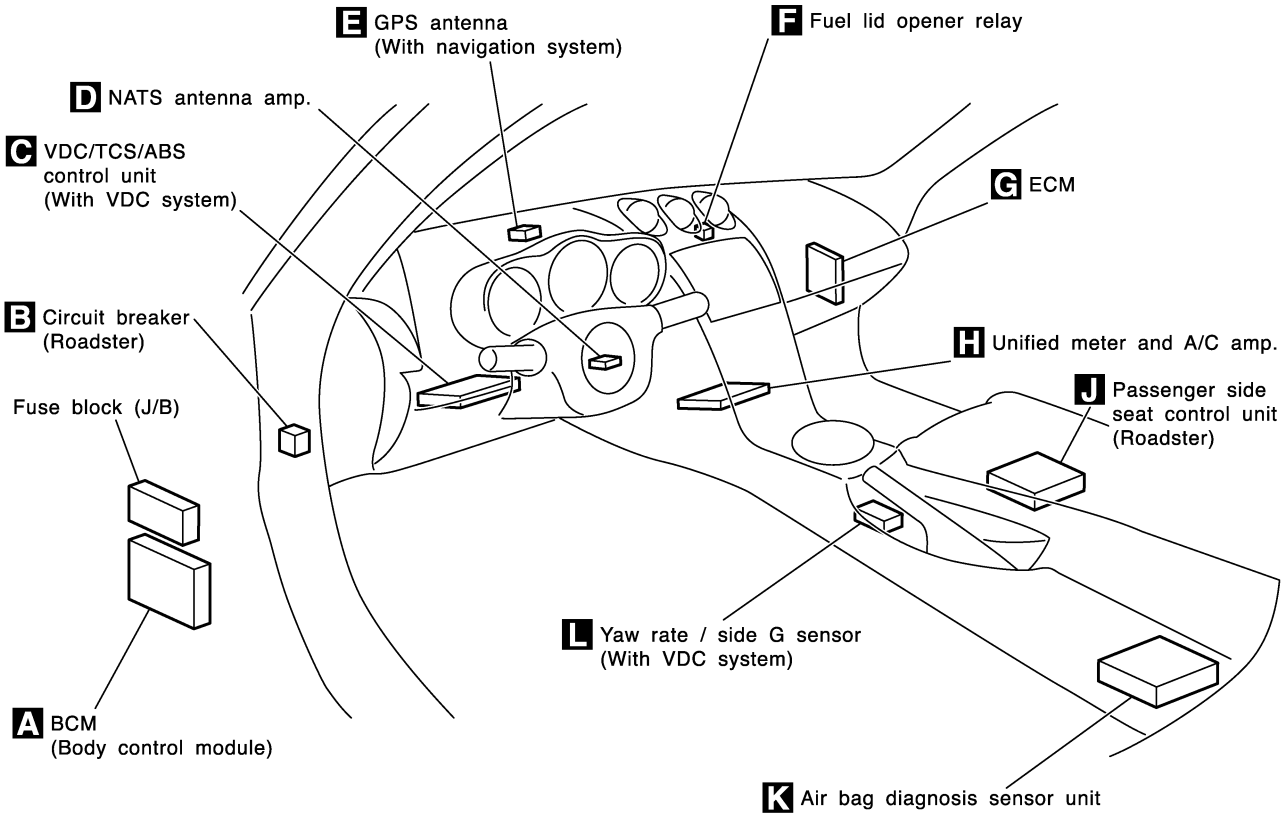

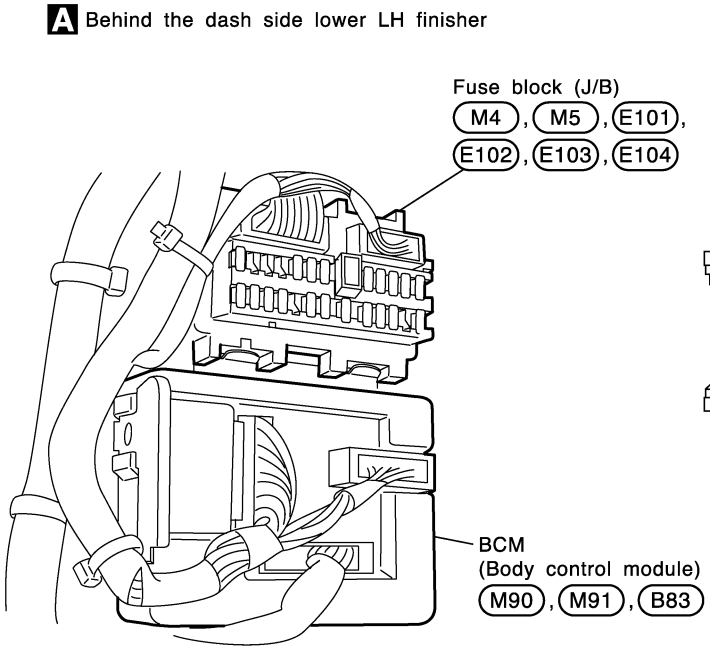

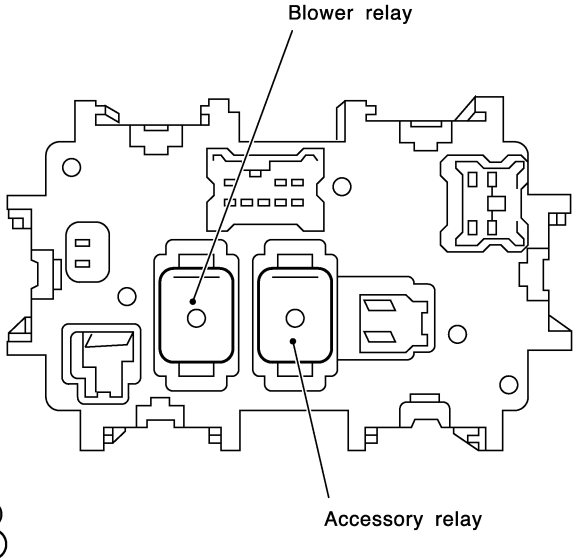

CKIT0541E

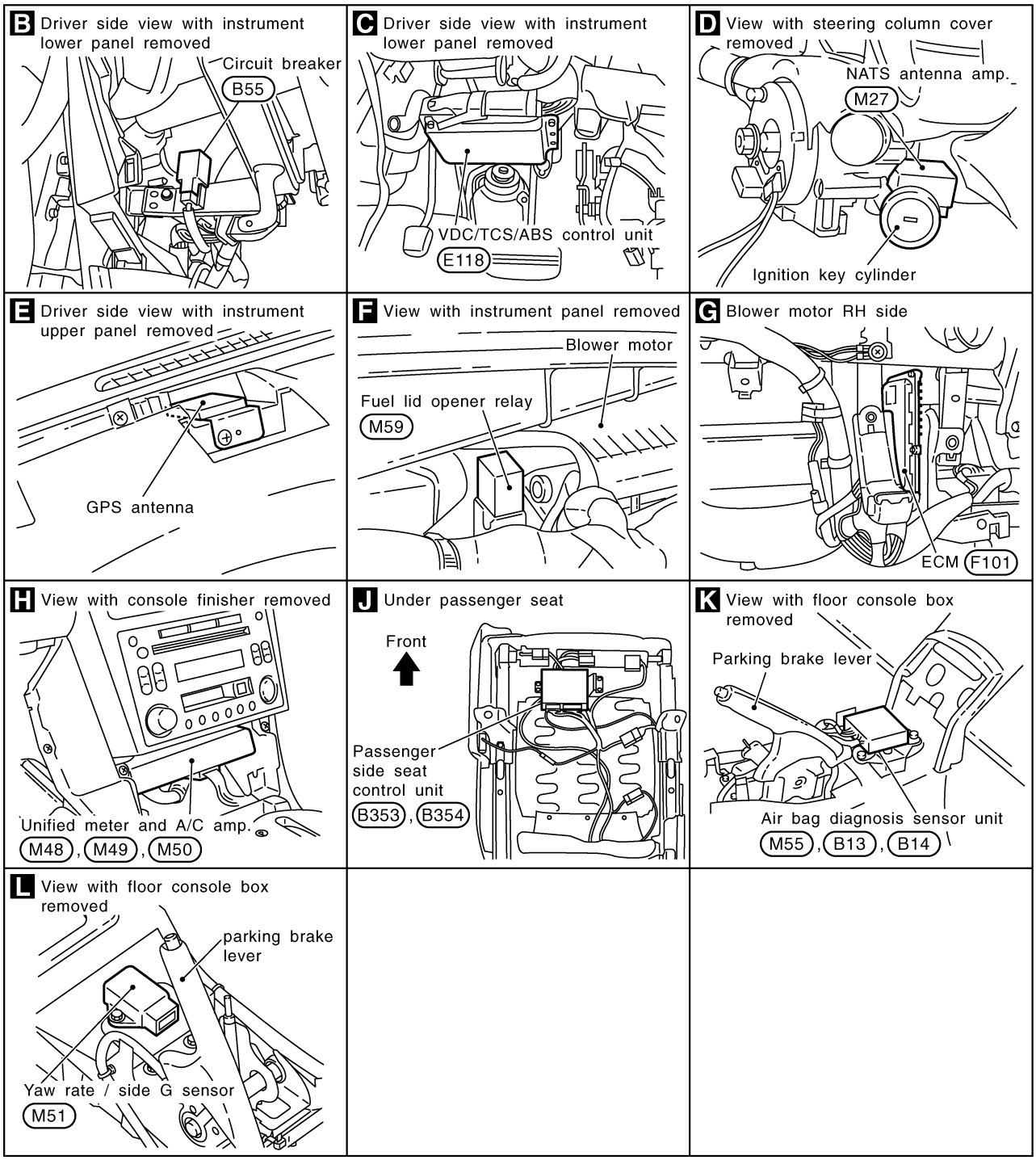
B Driver side view with instrument lower panel removed
Circuit breaker
B55
C Driver side view with instrument lower panel removed
VDC/TCS/ABS control unit
E118
D View with steering column cover removed
NATS antenna amp.
M27
Ignition key cylinder
E Driver side view with instrument upper panel removed
GPS antenna
F View with instrument panel removed
Blower motor
Fuel lid opener relay
M59
G Blower motor RH side
ECM
F101
H View with console finisher removed
Unified meter and A/C amp.
M48, M49, M50
J Under passenger seat
Front
Passenger side seat control unit
B353, B354
K View with floor console box removed
Parking brake lever
Air bag diagnosis sensor unit
M55, B13, B14
L View with floor console box removed
parking brake lever
Yaw rate / side G sensor
M51

CKIT0542E

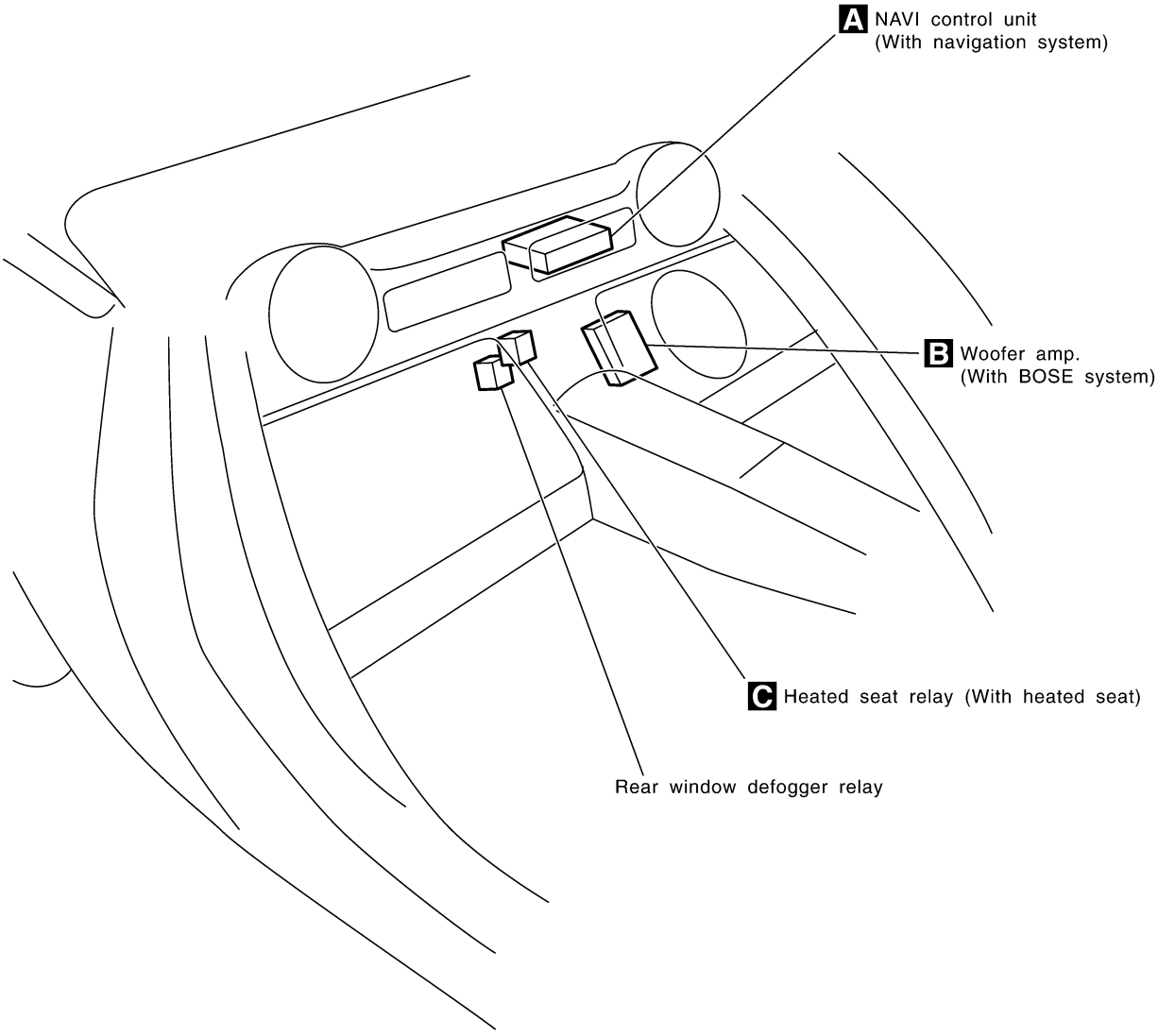
A NAVI control unit
(With navigation system)
B Woofer amp.
(With BOSE system)
C Heated seat relay (With heated seat)
Rear window defogger relay

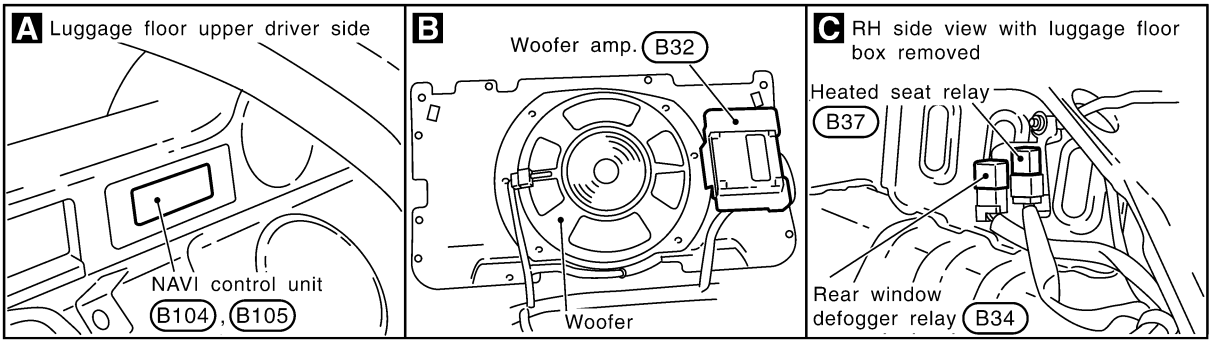
A Luggage floor upper driver side
NAVI control unit
B104, B105
B
Woofer amp. B32
Woofer
C RH side view with luggage floor box removed
Heated seat relay
B37
Rear window defogger relay B34

CKIT0349E

LUGGAGE COMPARTMENT
Coupe Models

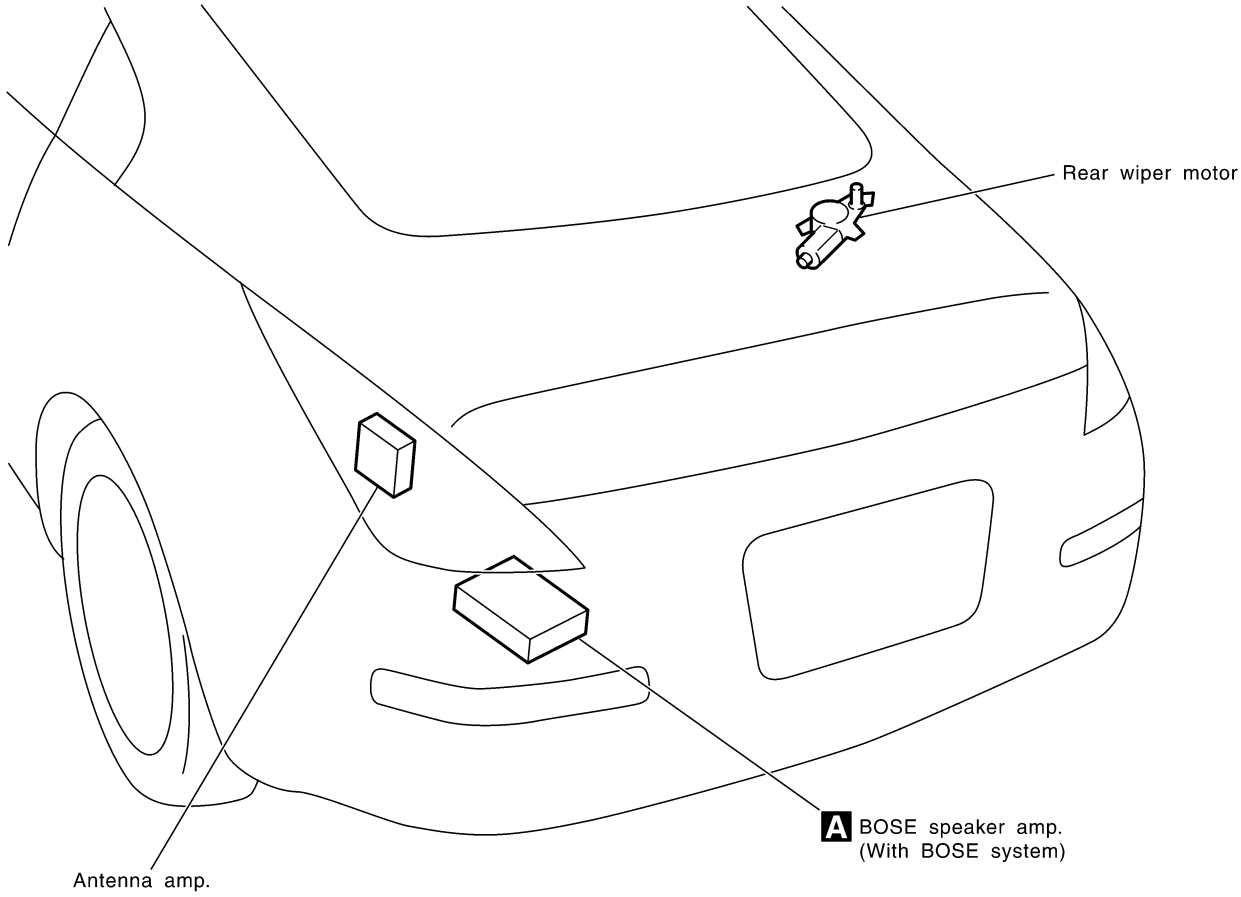

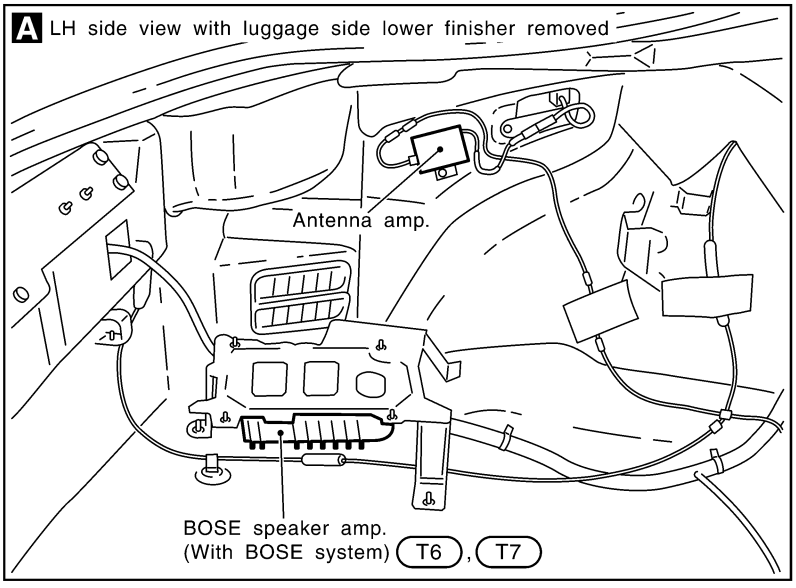

CKIT0216E

Roadster Models

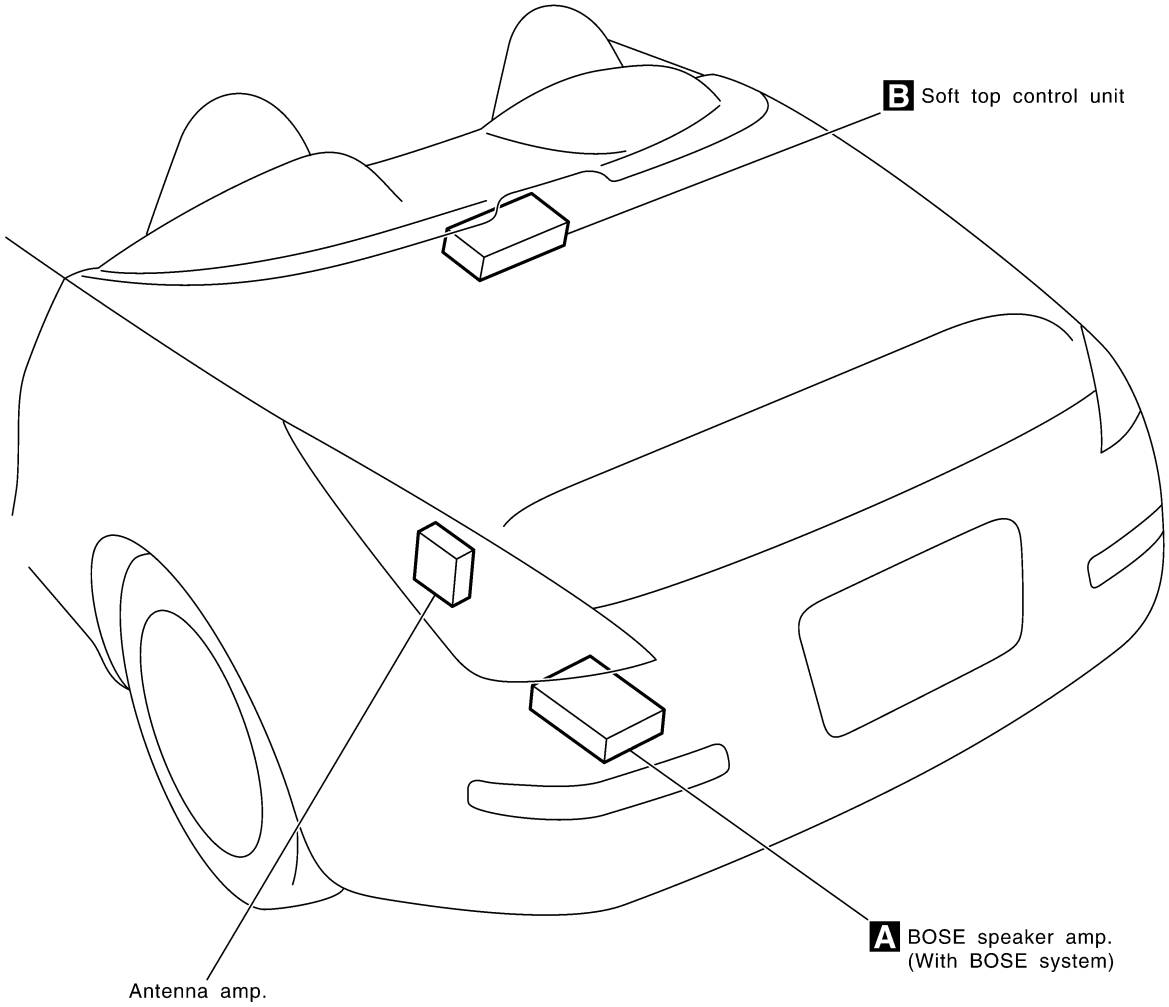

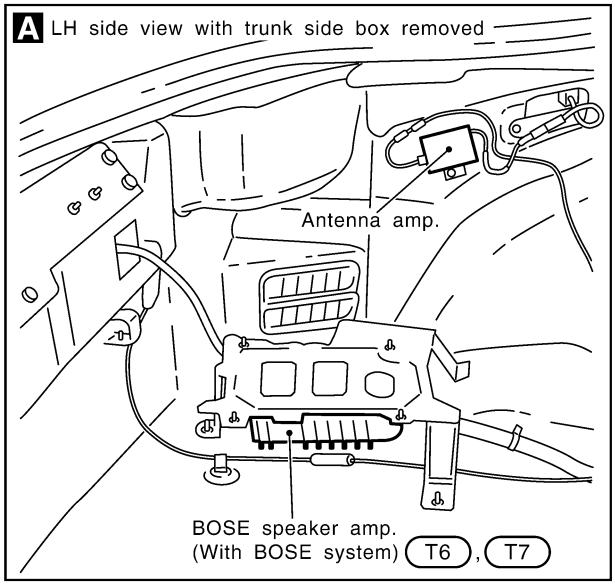

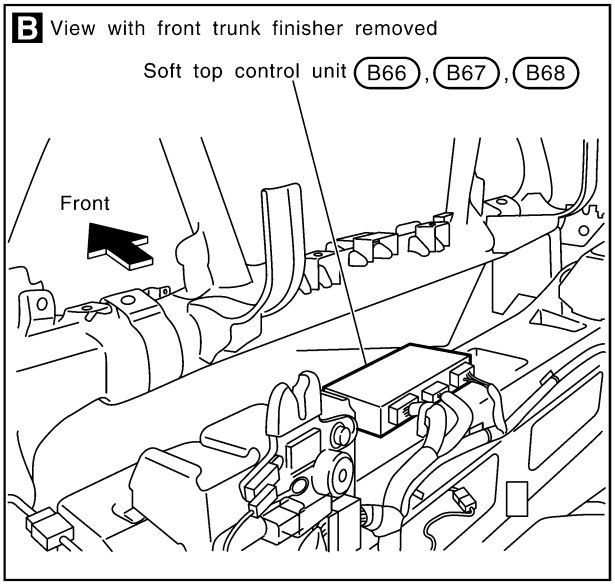

CKIT0350E

HARNESS CONNECTOR

PFP:00011

Description

AKS0012T

HARNESS CONNECTOR (TAB-LOCKING TYPE)

- The tab-locking type connectors help prevent accidental looseness or disconnection.
- The tab-locking type connectors are disconnected by pushing or lifting the locking tab(s). Refer to the figure below.

Refer to the next page for description of the slide-locking type connector.

CAUTION:

Do not pull the harness or wires when disconnecting the connector.

[Example]

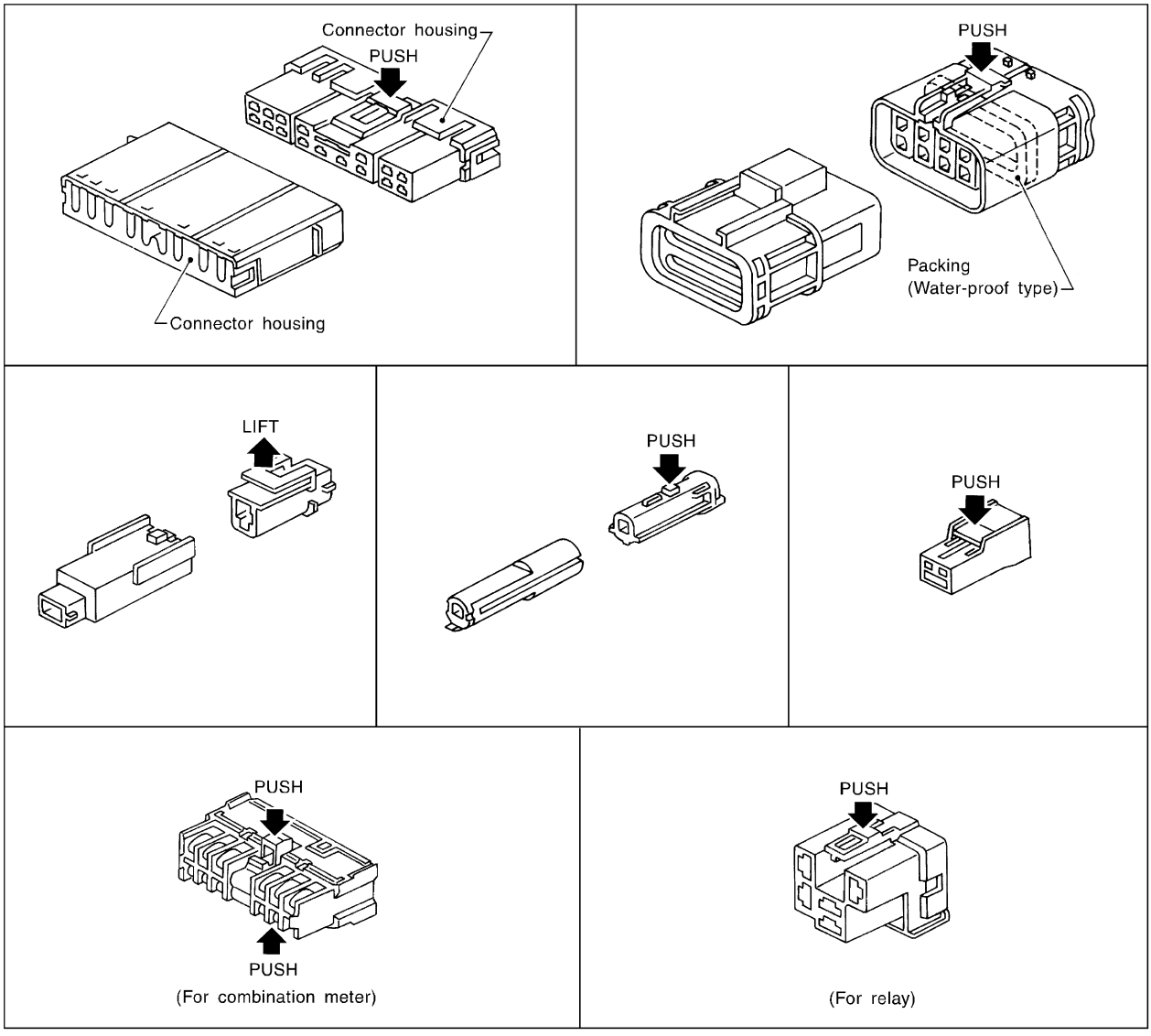

SEL769DA

HARNESS CONNECTOR (SLIDE-LOCKING TYPE)

- A new style slide-locking type connector is used on certain systems and components, especially those related to OBD.
- The slide-locking type connectors help prevent incomplete locking and accidental looseness or disconnection.
- The slide-locking type connectors are disconnected by pushing or pulling the slider. Refer to the figure below.

CAUTION:

- **Do not pull the harness or wires when disconnecting the connector.**
- **Be careful not to damage the connector support bracket when disconnecting the connector.**

[Example]

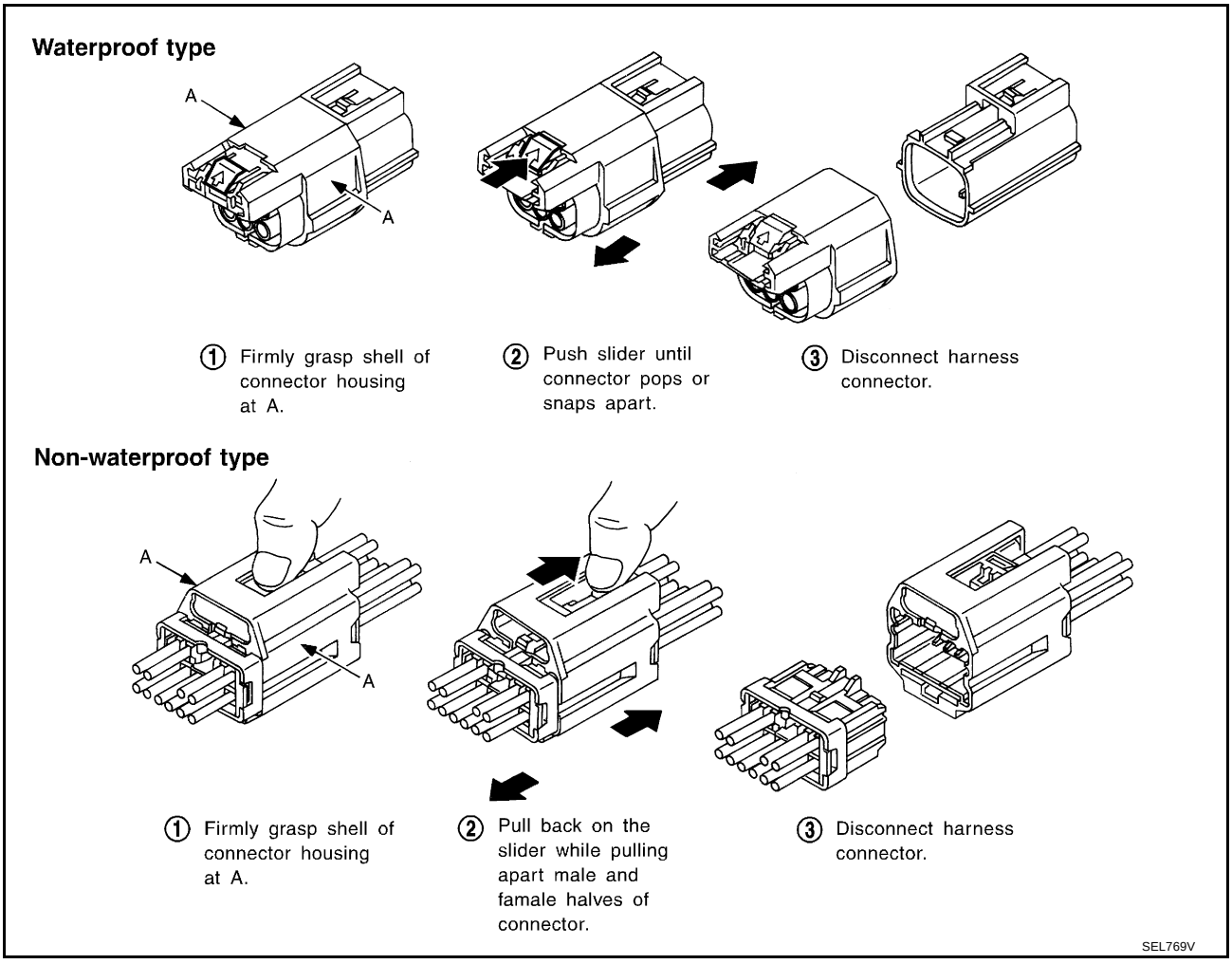

ELECTRICAL UNITS

PFP:00011

Terminal Arrangement

AKS0012V

ECM

F101

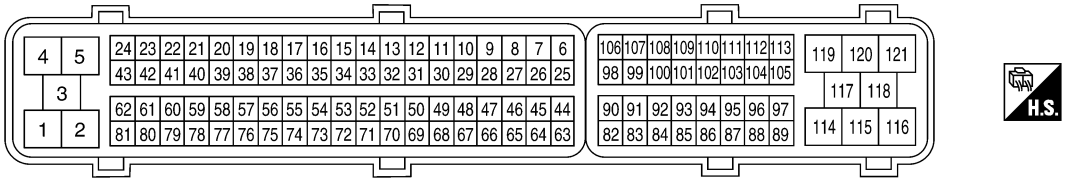

(Black)

ABS ACTUATOR AND ELECTRIC UNIT (CONTROL UNIT)

E51

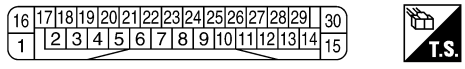

(Gray)

VDC/TCS/ABS CONTROL UNIT

E118

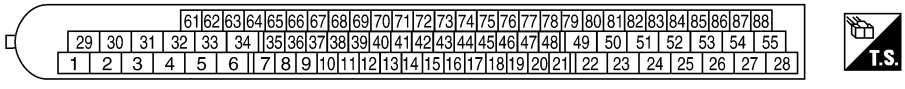

(Black)

UNIFIED METER AND A/C AMP.

M48

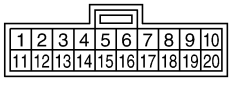

(Gray)

M49

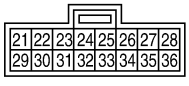

(Gray)

M50

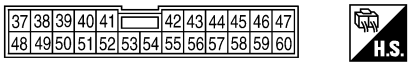

(White)

CKIT0294E

BCM (BODY CONTROL MODULE)

M90

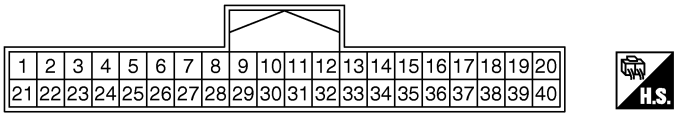

(White)

M91

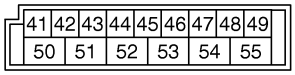

(Black)

B83

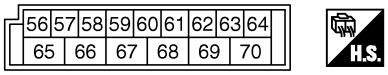

(White)

CKIT0647E

SMJ (SUPER MULTIPLE JUNCTION)

PFP:B4341

Terminal Arrangement

AKS0012W

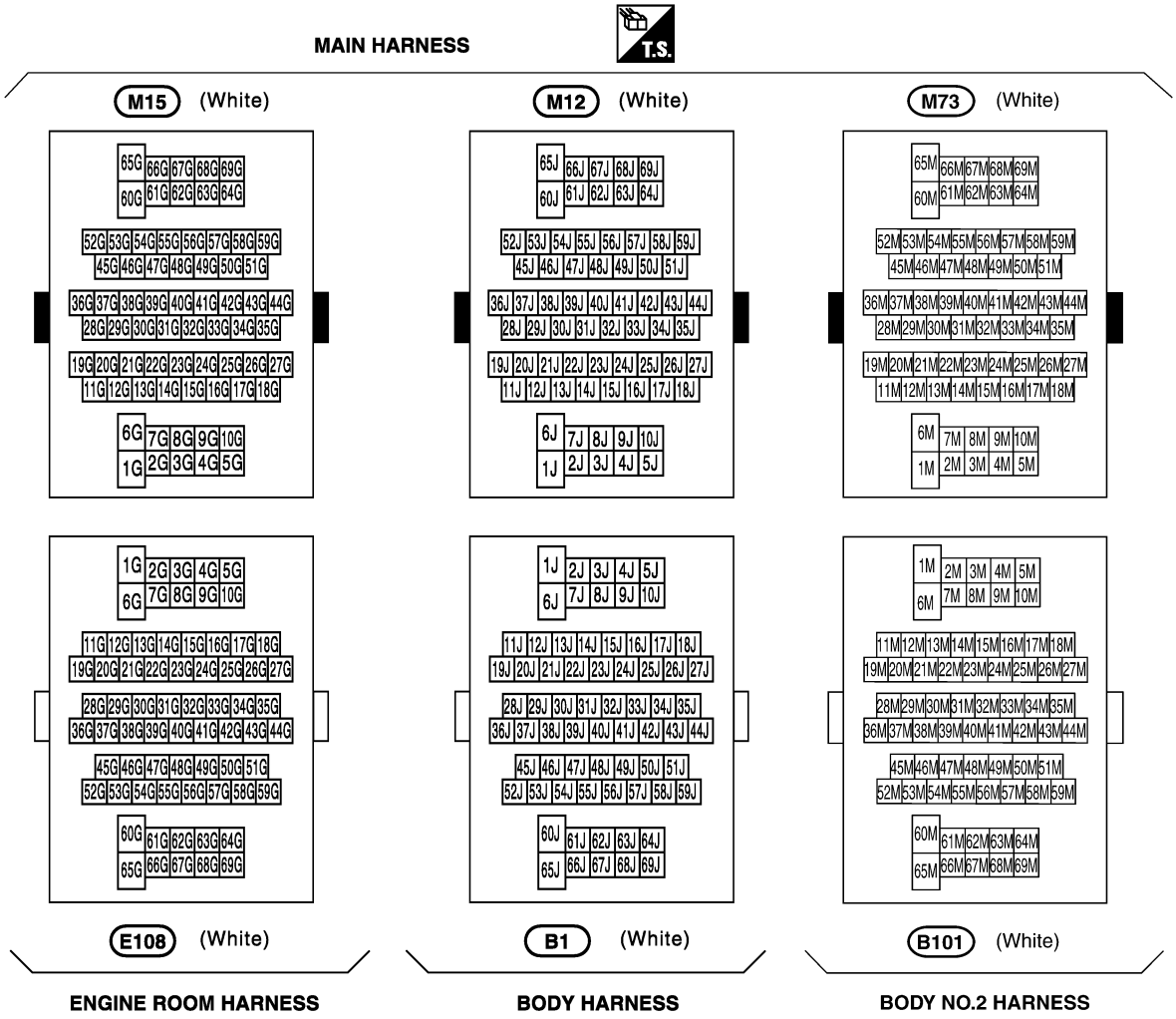

CKIT0543E

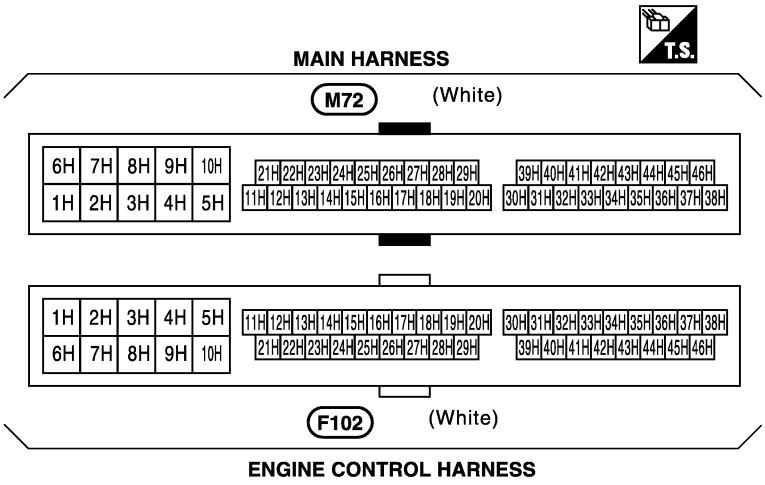
T.S.
MAIN HARNESS
M72
(White)
6H 7H 8H 9H 10H
1H 2H 3H 4H 5H
21H 22H 23H 24H 25H 26H 27H 28H 29H
11H 12H 13H 14H 15H 16H 17H 18H 19H 20H
39H 40H 41H 42H 43H 44H 45H 46H
30H 31H 32H 33H 34H 35H 36H 37H 38H
1H 2H 3H 4H 5H
6H 7H 8H 9H 10H
11H 12H 13H 14H 15H 16H 17H 18H 19H 20H
21H 22H 23H 24H 25H 26H 27H 28H 29H
30H 31H 32H 33H 34H 35H 36H 37H 38H
39H 40H 41H 42H 43H 44H 45H 46H
F102
(White)
ENGINE CONTROL HARNESS

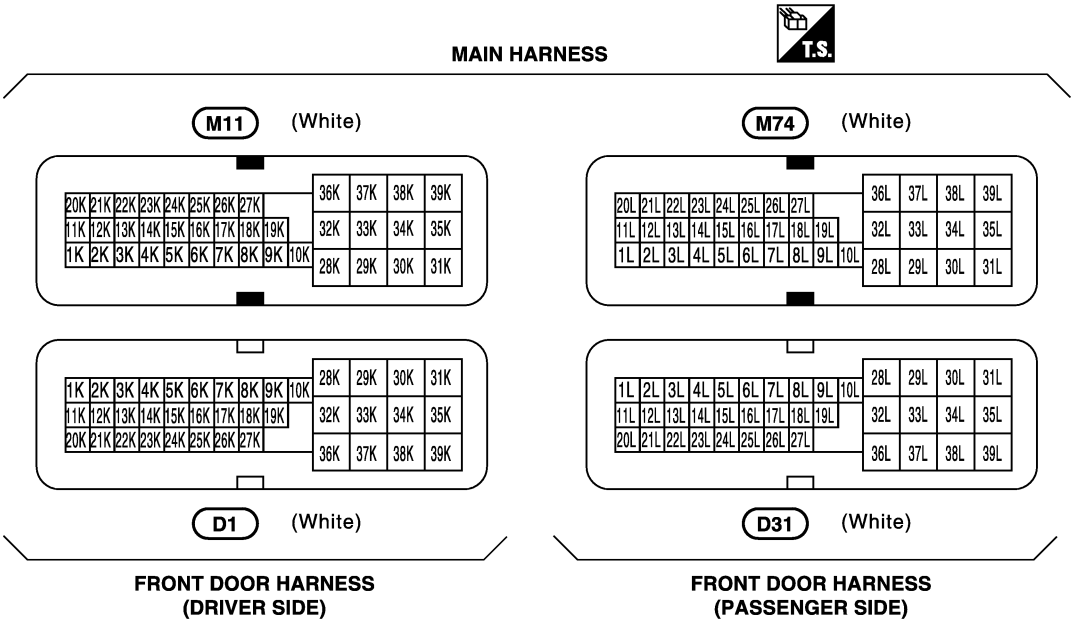
T.S.
MAIN HARNESS
M11
(White)
20K 21K 22K 23K 24K 25K 26K 27K
11K 12K 13K 14K 15K 16K 17K 18K 19K
1K 2K 3K 4K 5K 6K 7K 8K 9K 10K
36K 37K 38K 39K
32K 33K 34K 35K
28K 29K 30K 31K
M74
(White)
20L 21L 22L 23L 24L 25L 26L 27L
11L 12L 13L 14L 15L 16L 17L 18L 19L
1L 2L 3L 4L 5L 6L 7L 8L 9L 10L
36L 37L 38L 39L
32L 33L 34L 35L
28L 29L 30L 31L
1K 2K 3K 4K 5K 6K 7K 8K 9K 10K
11K 12K 13K 14K 15K 16K 17K 18K 19K
20K 21K 22K 23K 24K 25K 26K 27K
28K 29K 30K 31K
32K 33K 34K 35K
36K 37K 38K 39K
1L 2L 3L 4L 5L 6L 7L 8L 9L 10L
11L 12L 13L 14L 15L 16L 17L 18L 19L
20L 21L 22L 23L 24L 25L 26L 27L
28L 29L 30L 31L
32L 33L 34L 35L
36L 37L 38L 39L
D1
(White)
D31
(White)
FRONT DOOR HARNESS
(DRIVER SIDE)
FRONT DOOR HARNESS
(PASSENGER SIDE)

CKIT0158E

STANDARDIZED RELAY

PFP:00011

Description

AKS0012X

NORMAL OPEN, NORMAL CLOSED AND MIXED TYPE RELAYS

Relays can mainly be divided into three types: normal open, normal closed and mixed type relays.

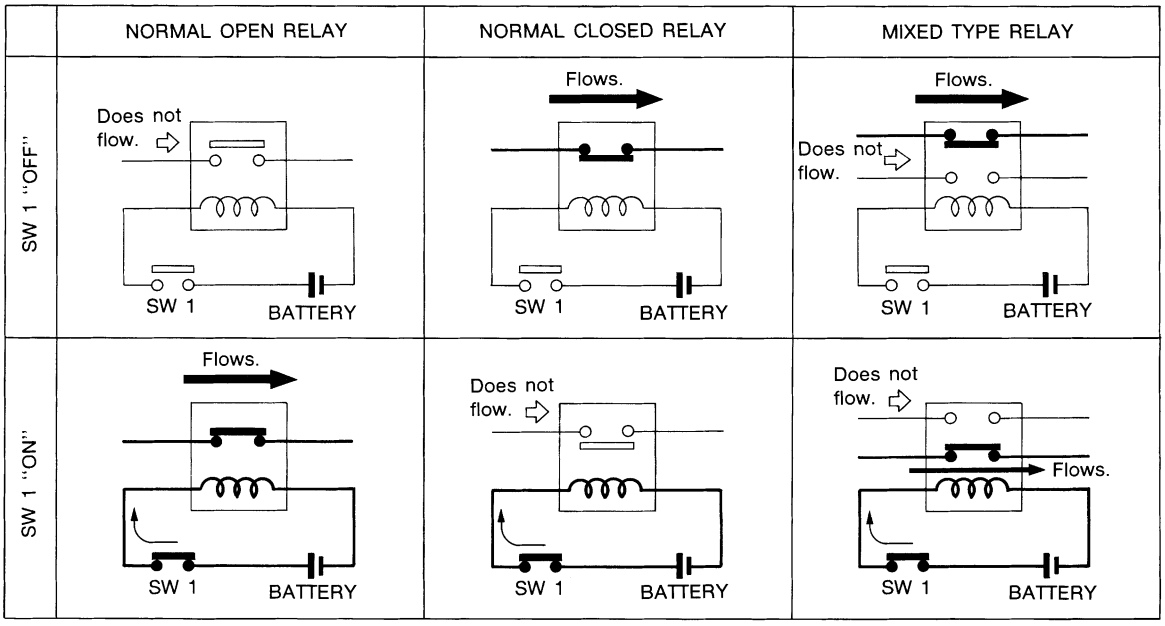

SEL881H

TYPE OF STANDARDIZED RELAYS

1M ..... 1 Make
2M ..... 2 Make
1T ..... 1 Transfer
1M·1B ..... 1 Make 1 Break

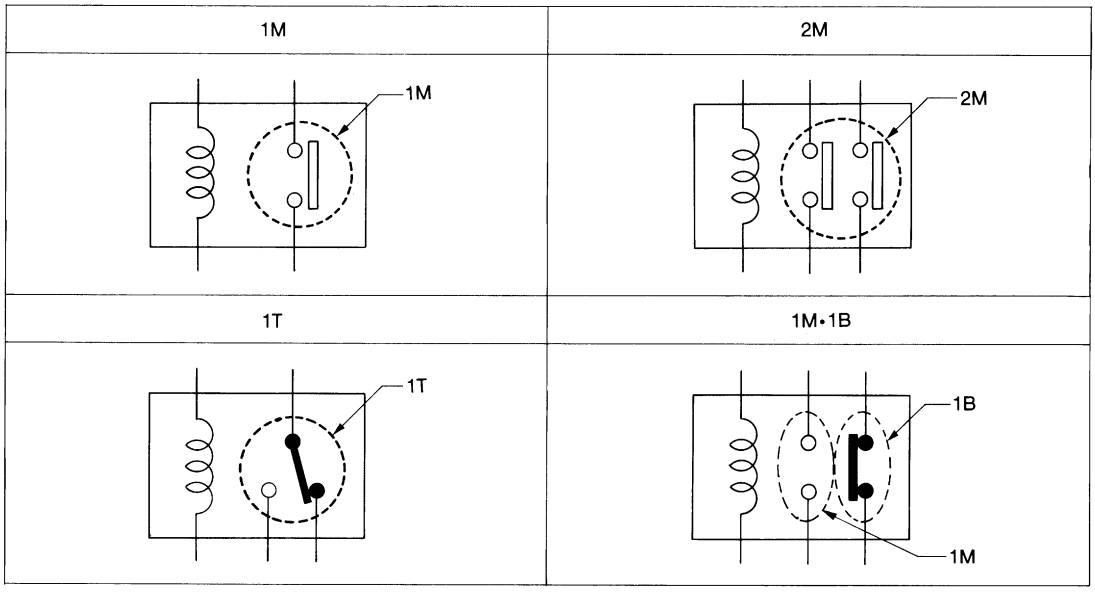

SEL882H

Type	Outer view	Circuit	Connector symbol and connection	Case color
1T	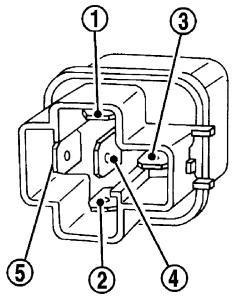	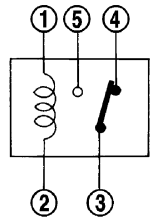	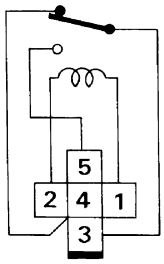	BLACK
2M	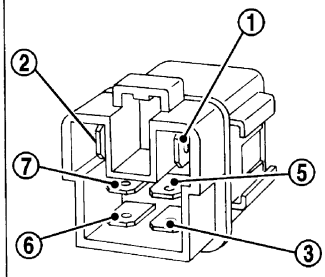	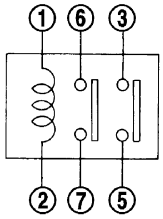	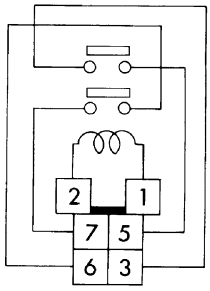	BROWN
1M•1B	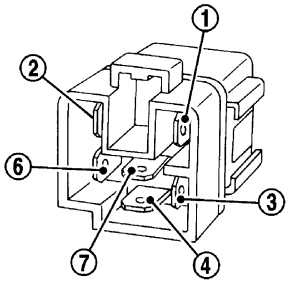	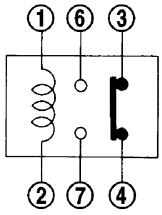	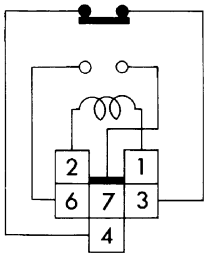	GRAY
1M	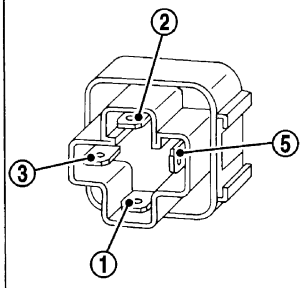	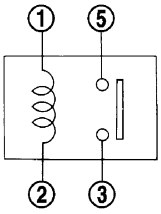	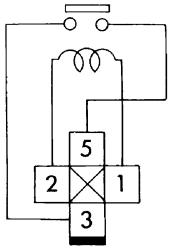	BLUE
	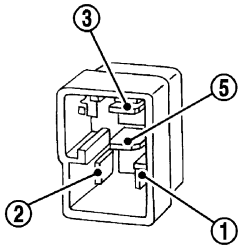		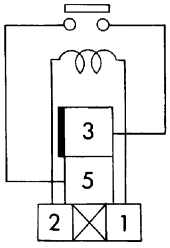	

The arrangement of terminal numbers on the actual relays may differ from those shown above.

SEL188W

FUSE BLOCK - JUNCTION BOX (J/B)

PFP:24350

Terminal Arrangement

AKS0012Y

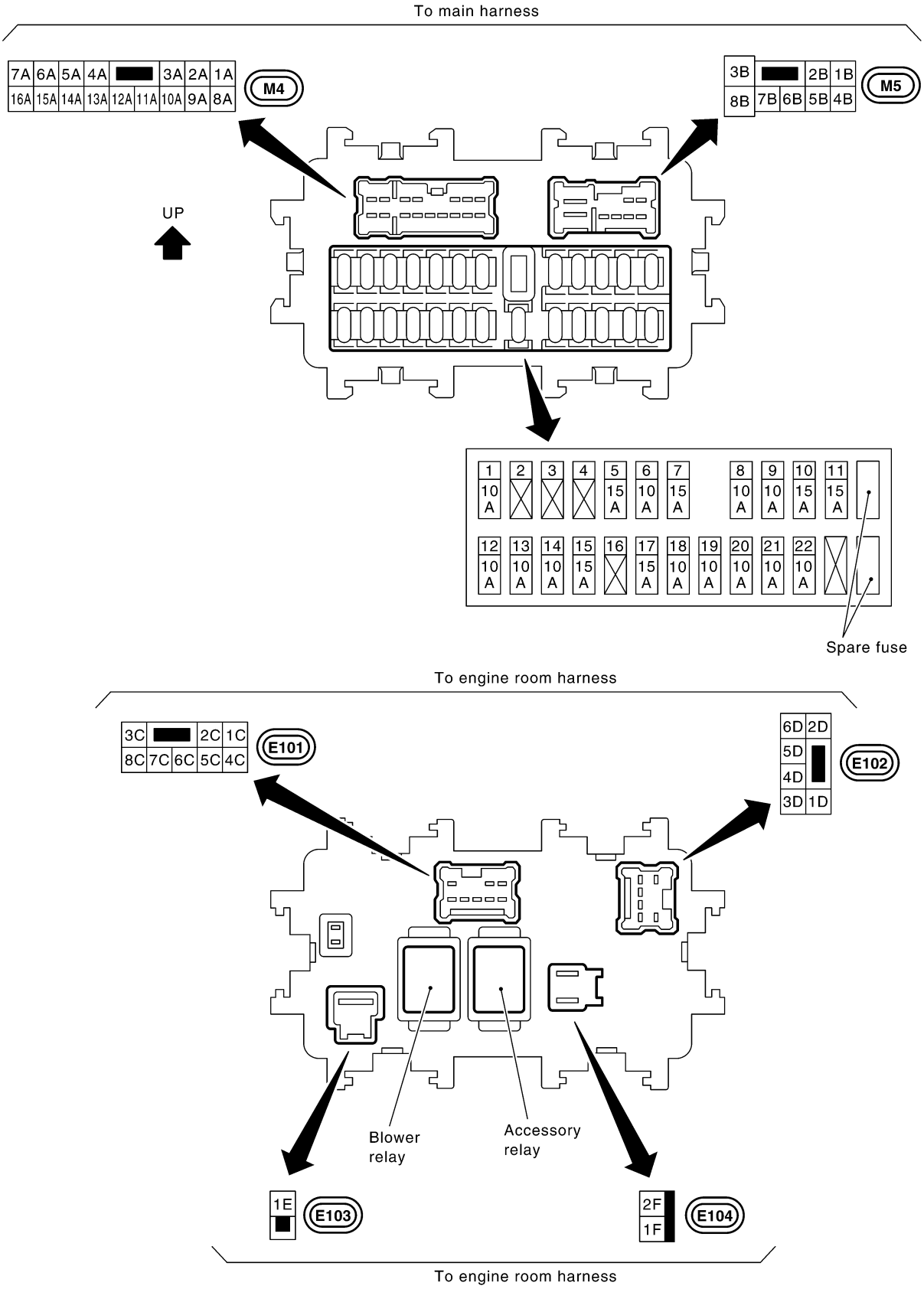

CKIT0363E

FUSE, FUSIBLE LINK AND RELAY BOX

PFP:24382

Terminal Arrangement

AKS0012Z

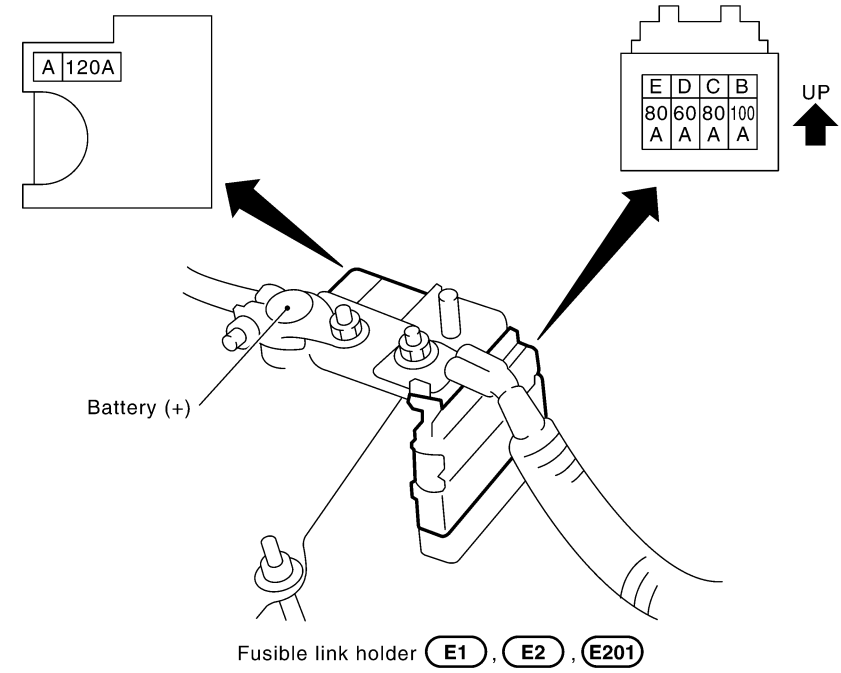

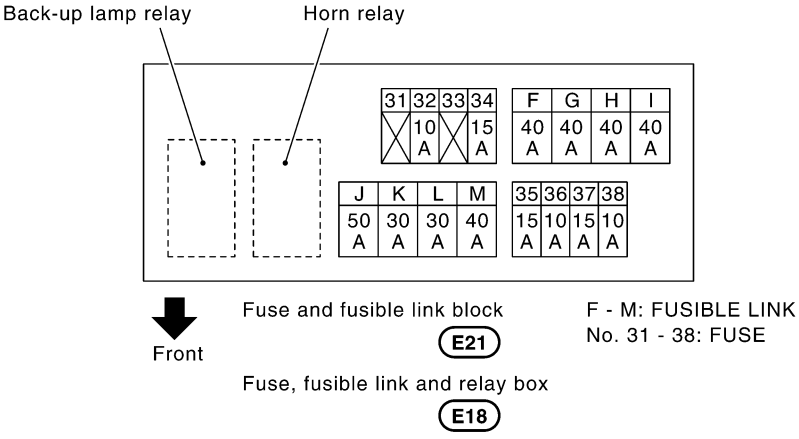

CKIT0186E